Table of Contents

Volume 1: Assessment Report

Introduction 1
Field Assessment 3
What is an Outfall? *3*
Naming Convention *4*
Outfall Assessment Method *5*
Outfall Assessment Method *6*
Geomorphic Assessment *11*
Analysis and Prioritization 17
Prioritization Algorithm *17*
Environmental Goals Score *19*
Infrastructure Goals Score *21*
Priority Action Scale *22*
Algorithm Results *23*
Prevention and Inspection 25
Prevention *25*
Inspection *26*
Conclusion 31
Appendix A - Improvement Techniques and Associated Costs
Appendix B - Priority Action List

Volume 2: Mapping and Data

Mapping:
Stormwater Outfall Locations
High and Moderate Action Priority
Inspection Schedule
Outfalls and Drainage Destinations
PowerPoint Presentation
SMRC Review Sheets
Photos
Field Data Sheets
Outfalls Database
CD-ROMs (See Volume 2 for content of CD)

Volume 3: Outfall Summary Sheets

Volume 4: Outfall Inspection Checklists

(To be completed by Town)

ENGINEERED SOLUTIONS

ENGINEERED SOLUTIONS, INC.
P.O. BOX 4628
BURLINGTON, VT 05406
(802) 658-2445

www.esivt.com

In coordination with:

South Mountain
Research & Consulting Services

C.L. Davis Consulting Associates

This report was developed in the offices of Engineered Solutions, Inc. in Burlington, Vermont and published in February, 2003 on recycled paper.

Please recycle.

Introduction

Water quality is the result of a complex mixture of natural and human influences. By collecting and transporting stormwater runoff via ditches, drain pipes, etc. we, as a society, have inserted ourselves into the flow of nature. Thus, because we have taken the responsibility for the collection of waters, we must also responsibly dispose of them. Through this Project, the Town of Colchester has begun the process of taking on this responsibility by assessing the condition of existing outfalls and developing guidance for the improvement of stormwater discharge from outfalls in the Town.

This Project attempts to satisfy two general goals. First, provide a snapshot of the conditions of stormwater outfalls. Second, establish a protocol and data infrastructure that supports the future management of stormwater outfalls. By addressing these two goals, this Project aids the Town in satisfying the management measures required by the EPA Phase II Stormwater Regulations (for MS-4 communities) and establishes protocols for continued compliance.

Specifically, the content/data and recommendations developed are a major step towards directly satisfying the requirements of *Measure 6: Pollution Prevention/Good Housekeeping*. Additionally, the protocols for inspection and ongoing data collection developed by the Project create the infrastructure that can help to detect illicit discharges; thus supporting efforts under *Measure 3: Illicit Discharge Detection and Elimination.*

This Project Report contains three volumes that document the data, conclusions and recommendations of the Project. This volume, Volume 1: *Assessment Report* summarizes the approach, methods and conclusions developed during the execution of the Project. Whereas Volume 1 is a narrative, Volumes 2 and 3 primarily present raw and processed data and mapping. Volume 2: *Mapping and Data* contains the raw data and analysis developed by the Project, a variety of maps, outfall photographs, etc. and a CD-ROM containing Project data. Volume 3: *Outfall Fact Sheets* contains individual fact sheets for each outfall assessed by this report which summarize the existing conditions, and, where appropriate, propose improvements and the priority for improvement actions. All three volumes work together to provide a snap shot of existing conditions and provide a guide for future actions by the Town.

The Project was executed in three phases:

Phase I)	Field Identification and Assessment
Phase II)	Data Analysis and Prioritization
Phase III)	Prevention and Inspection

During Phase I the Project Team identified, reviewed and assessed the condition of known stormwater outfalls. Phase II involved the collation of field data into a project database and the development of analysis techniques to extract information and develop priorities. Phase III presents inspection and management approaches that strive to improve and maintain the health of the waters of Colchester.

The Field Assessment phase of this project involved visiting known stormwater outfalls in the Town and assessing the condition of the outfall structure and that of the receiving streambed (or ditch). Recognizing the potential complexity and volume of data to be collected, a number of standard data collection and naming conventions were developed to ensure a flexible yet stable data set that would support future analysis. The following sections outline these standard field methods and project specific definitions.

What is an Outfall?

The Chittenden County Regional Planning Commission (CCRPC) had previously identified and located known outfalls and provided ESI this information as point data in ArcView format. The Project Team then uploaded this information to our GPS (Global Positioning System) and set about finding outfalls. We quickly discovered that a number of the points provided as outfalls were either, clearly not outfalls (ie. a catchbasin) or were "questionable" outfalls (ie. detention ponds). It became evident that there were differing opinions as to what constituted an *outfall*. A list of "CCRPC Outfalls" that are, in fact, not outfalls are listed in the data tables of Volume 2 - Mapping and Data.

For the purposes of this project a clear and narrow definition was created. Only those structures that were at the end of a stormwater collection system and also discharged to surface waters (or to a conduit leading to surface waters) were assessed. A simple example of what would not be considered an outfall is a pipe culvert. Although it looks like an outfall and can affect downstream water quality, its purpose is convey a "natural," flowing stream and it is not located at the terminus of a collection system.

Conversely, numerous structures that are commonly referred to as "culverts" that *are* included as outfalls. These are typically located at the bottom of a developed area of land and convey the flow from roadside ditches under a roadway. This type of outfall was not typically identified by the CCRPC. Because the scope of this project was focused on the *assessment* of outfalls, not location/identification, there may be additional outfalls of this type located in Colchester that have not been located.

Definition

Outfall (***noun***)
Any structure constructed at the interface between an engineered stormwater collection system and surface waters (or surface drainage that drains to surface waters).

Typical structures that were identified by the CCRPC as outfalls but are not outfalls, as defined by this project, are pipes that discharge to detention/retention ponds and infiltration chambers. In these cases the outlet or overflow was located and identified as the outfall. In the case of retention ponds and infiltration chambers, a clear overflow (discharging to surface waters) was not always able to be located and thus was not included in this report.

Naming Convention

The CCRPC identified 129 outfall locations and named each with an apparently random identification number. (The column in the database was actually called "random") Due to the expected volume of data, it was clear that this naming convention would not support a flexible and logical data structure.

Therefore, a new system was established that would allow the user to easily locate the outfall on a printed map and also provide a stable structure that allows for efficient data management. The convention starts with the ortho grid used by the state to create 1:5000 orthophotos. This grid is comprised of 4000 meter by 4000 meter cells (approx. 6 square miles), each with a name that matches the name of the associated orthophoto (ie. 100220). Because the Town is covered by only twelve cells; simpler, more intuitive names were developed by identifying columns by letters and rows by numbers. Within each cell, the outfalls were identified by a three digit serial number; this allows for up to 999 outfalls in a single cell. Generally, these serial numbers increase from west to east. However, it is expected that as outfalls are added and removed over time, this convention will dissolve. The map below depicts the naming system.

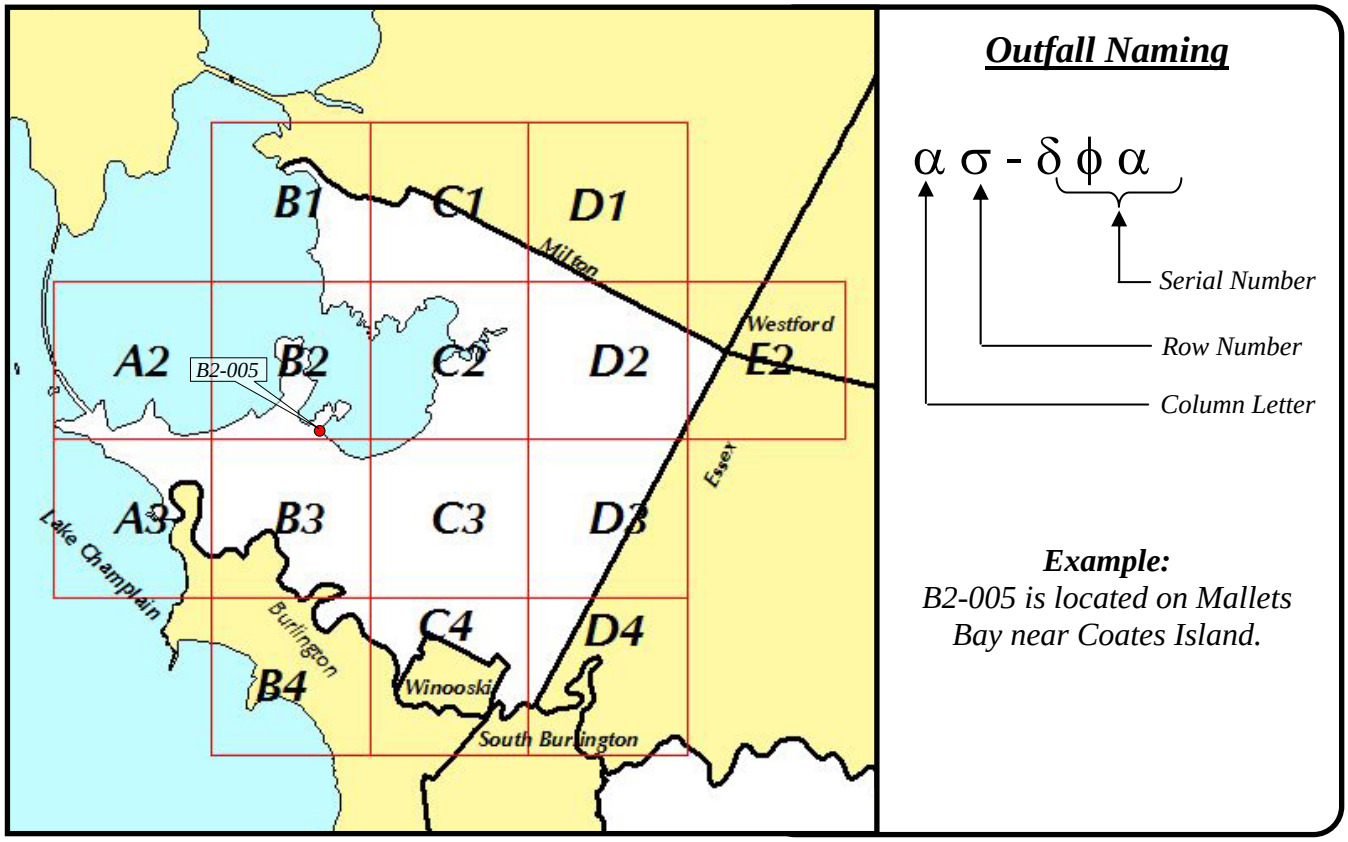

Draft

Stormwater Outfalls in Colchester

Outfall ID	Descriptive Name	Outfall ID	Descriptive Name
A2-001	HOLY CROSS	C3-023	OAK CIRCLE RD
A3-001	BUCKINGHAM	C3-024	COUNTRY MEADOWS
A3-002	BUCKINGHAM DR	C3-025	118 ORCHARD
A3-003	WINDMERE WAY	C3-026	EAGLE PARK
A3-004	RIVER RD	C3-027	EAGLE PARK
A3-005	END OF MALLARD	C3-028	SUNDERLAND WDS #2
B2-001	OVERLAKE	C3-029	ACORN LN #3
B2-002	TIMBERLAKE	C3-030	MIDDLE SCHOOL
B2-003	MARBLE ISLAND RD	C3-031	TOWN OFFICES
B2-004	COATES ISLAND	C3-032	HEALTH CENTER
B2-005	LAKESHORE	C4-001	MALLETS BAY
B3-001	MALLARD	C4-002	VALLEYFIELD
B3-002	MALLARD	C4-003	MALLETS BAY
B3-003	PORTERS POINT	C4-004	MALLETS BAY
B3-004	HEINEBURG	C4-005	YOUNG
B3-005	PORTER PT	C4-006	COLONIAL
B3-006	HOLBROOK	C4-007	WATER TOWER HILL
B3-007	MOBIL-HEINEBURG	C4-008	WATER TOWER HILL
B3-008	PARSONS RD	C4-009	WATER TOWER HILL
B3-009	MCRAE	C4-010	WATER TOWER HILL
B3-010	MACRE RD	C4-011	SHAWS
B3-011	SHORE ACRES RD	C4-012	SHAWS
B3-012	SHORE ACRES DR	C4-013	SHAWS
B3-013	SHORE ACRES RD	C4-014	ROUTES 2 + 7
B3-014	SHORE ACRES RD	C4-015	ROUTES 2 + 7
B3-015	SHORE ACRES RD	C4-016	LOWER MTN VIEW
B3-016	LAKESHORE DR	C4-017	HERCULES
B3-017	LAKEVIEW DR	C4-018	ST.MICHAEL'S COLLEGE
B3-018	EAST LAKESHORE DR	C4-019	ORION DRIVE
B3-019	BELLWOOD SUB. SYS.	C4-020	REYNOLDS
C1-001	WATKINS RD	D2-001	VILLAGE
C1-002	CHIMNEY HILL RD	D3-001	FORMAN
C2-001	1086BAY	D3-002	FORMAN
C2-002	1062 BAY	D3-003	WELLS AVE
C2-003	35 BAY	D3-004	GIFFEN
C2-004	1277 BAY	D3-005	KYLIE'S
C2-005	BAY	D3-006	HIDDEN OAKS
C2-006	GRANITE CREEK	D3-007	WALL
C2-007	GRANITE CREEK	D3-008	KYLIE'S
C2-008	201 HOLLOW	D3-009	LIBERTY
C2-009	CHESTNUT	D3-010	MAIN ST
C2-010	SHETLAND	D3-011	PARKWOOD
C2-011	INDIAN CIRCLE	D3-012	WOLCOTT
C3-001	LAVGNE RD	D3-013	WOODROSE
C3-002	TOWERRIDGE	D3-014	VILLAGE COMMONS
C3-003	EVERBREEZE	D3-015	WESWARD
C3-004	BLAKLEY	D3-016	JOCELYN
C3-005	796 BAY	D3-017	ARBOR
C3-006	903 BAY	D3-018	ARBOR
C3-007	JOEY DR	D3-019	ARBOR
C3-008	JOEY DR	D3-020	CANYON ESTATES DR
C3-009	BAYVIEW DR	D3-021	HILLTOP CT
C3-010	JASON	D3-022	ARBOR
C3-011	JASON	D3-023	BIRCHWOOD
C3-012	JASON	D4-001	FORT ETHAN ALLEN
C3-013	EDGEWOOD	D4-002	FORT ETHAN ALLEN
C3-014	EDGEWOOD DR	D4-003	FORT ETHAN ALLEN
C3-015	EDGEWOOD DR	D4-004	TROY AVENUE #1
C3-016	EDGEWOOD DR	D4-005	TROY AVENUE #2
C3-017	EDGEWOOD DR	D4-006	TROY AVENUE #3
C3-018	ACORN LN	D4-007	TROY AVENUE #4
C3-019	ACORN LN	D4-008	ROUTE 15
C3-020	SUNDERLAND WOODS	D4-009	TROY AVENUE #5
C3-021	CHAMPLAIN DR	D4-010	TROY AVENUE #6
C3-022	ROUTE 2 + 7		

Descriptive name provided by CCRPC

Outfall Assessment Method

It was evident that a standardized approach to data collection would also be necessary to efficiently and accurately assess all 129 identified outfalls. Thus a data collection form was developed that both ensured that all of the necessary data would be collect and also grouped into categories that allowed for simplified data entry. As a policy, all field visits were conducted by two people, one of which being ESI staff. This served to maintain consistency and was a matter of practical safety.

A draft form was developed and field tested with the entire Project Team. This exercise greatly improved the field data sheet and also served as an orientation to the data collection phase of the project. A variety of field protocols and conventions were developed as a result of this process. (ie. the "right side" of the stream is always the right side as if looking downstream.)

The data was divided into 7 sections identified as A -G, and each piece of data in these sections was identified by number. A total of 131 pieces of discrete data were assessed for each outfall site. The following paragraphs summarize the information collected in each section and some of the field conventions/interpretations that were used to develop the data.

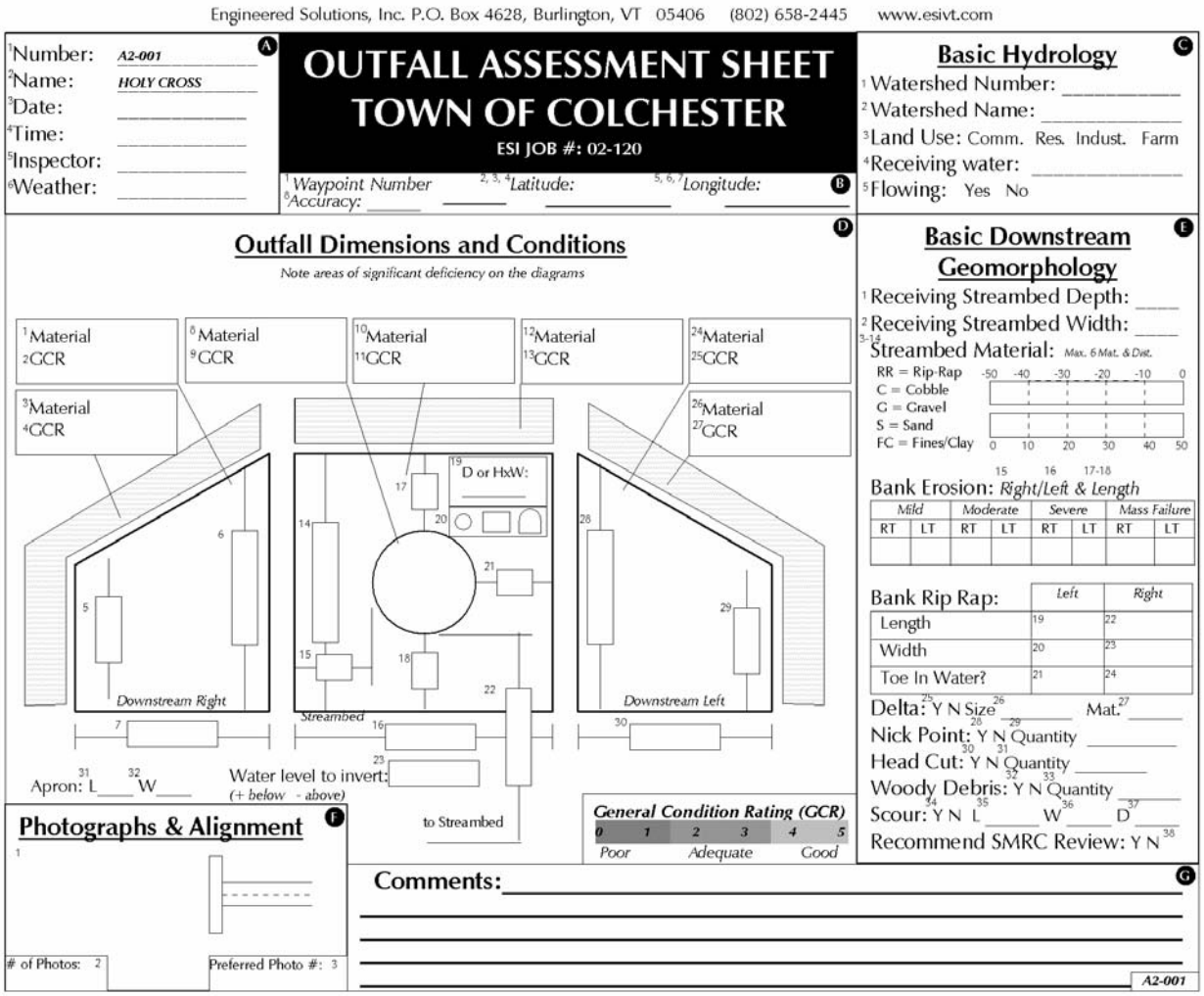

Section A

Section A contains the administrative data associated with each assessment. The "Number" field contains the new number assigned by the Project Team, but the "Name" field contains the common name given by the CCRPC. In cases where a new outfall was identified, a new "name" was chosen.

A

1 Number: _____

2 3 Name: _____

4 Date: _____

5 Time: _____

6 Staff: _____

Section B

Each outfall was identified by a "waypoint" and saved in the GPS unit. This information allowed for the plotting of the outfall locations in GIS and will support the location of the outfall in the future. The accuracy of the reading was recorded also recorded and was typically in the 20' to 40' range.

B

1 8 *Waypoint Number* _____ 2, 3, 4 *Latitude:* _____ 5, 6, 7 *Longitude:* _____

Accuracy:

Section C

The watershed name and number are based on the *Town of Colchester - 2002 Stormwater Management Plan*. These fields were not completed in the field, but rather were added by a link to the database. The land use assessment was based on observation of the obvious upstream watershed area.

C

Basic Hydrology

1 2 Watershed Number:

3 _____

Watershed Name:

5 _____

The vast majority of outfalls were not flowing. A "flowing outfall" was often an indication that it was actually a culvert or that it collected groundwater in some fashion. Worst case, this could indicate cross connection with waste systems. However, we did not encounter an outfall with obvious, noticeable sewage flow*.

* At *B3-019 Bellwood Subsurface Drainage* outfall we noticed algae blooms that could be attributable to an elevated phosphorous level in the discharge. However, it is beyond the scope of this project to confirm this condition and/or determine the source. This condition was made known to Town staff at the time.

Section D

Section D was designed to record all possible physical dimensions of an outfall under a best case scenario. However, the vast majority of outfalls did not have headwalls or wingwalls, thus significantly reducing the amount of data actually collected.

To create a standardized and quantities approach to the assessment of the outfalls a simple scoring system was developed. The *General Condition Rating* (GCR) is a 0 to 5 scale where a score of 5 reflects the "best" conditions and 0 reflects the "worst" case. The GCR was applied to each structural component of the outfall. The scale is subdivided into 3 ranges for ease of application. A score in the 0-1.4 range represents poor conditions, 1.5-3.4 represents adequate conditions, and 3.5-5 represent good conditions.

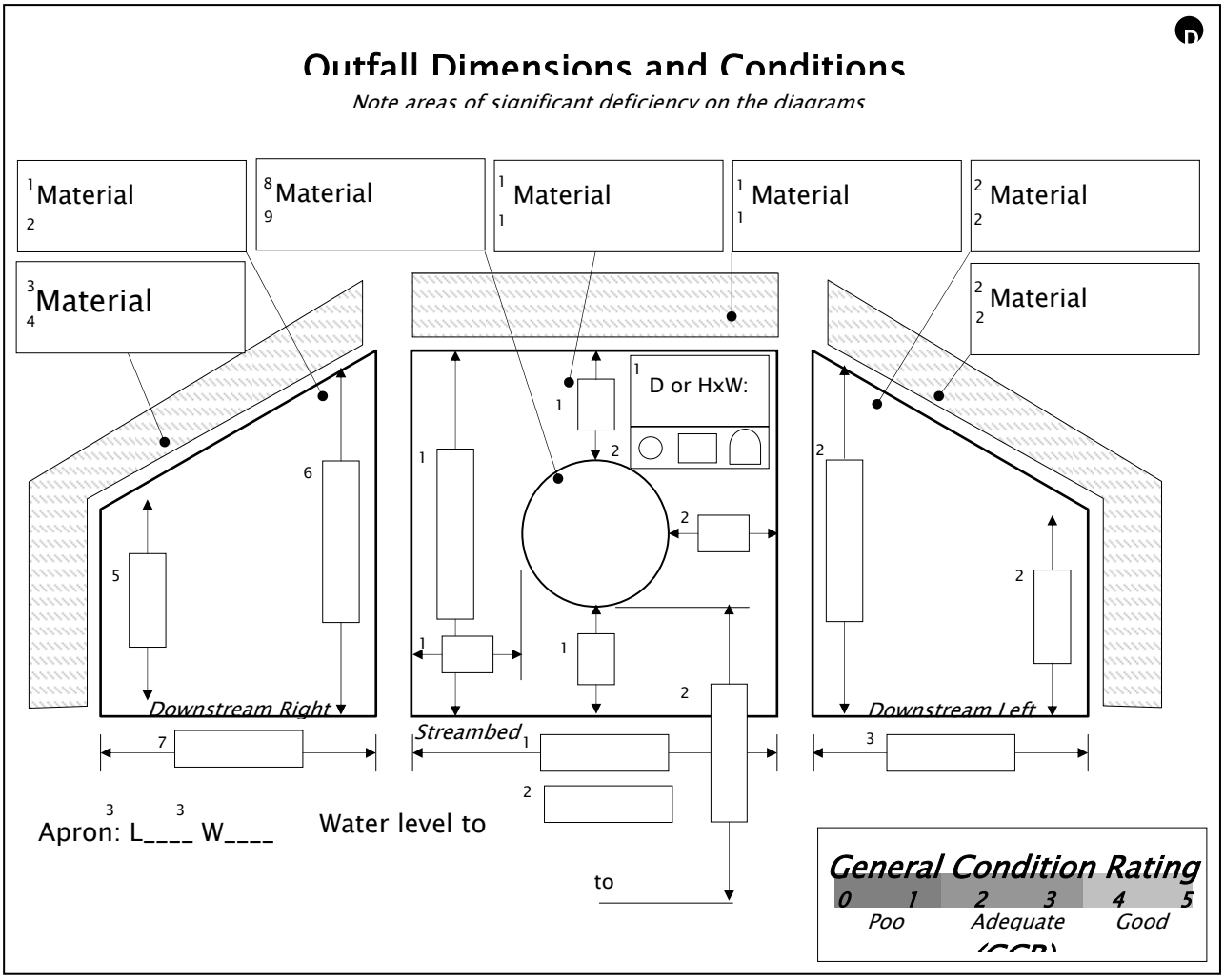

To receive a score in the poor range the component must be structurally compromised and as a result causing damage to downstream conditions. Similarly, if a component is structurally compromised but is in an apparently stable state and is not directly damaging downstream conditions it would receive a

score in the adequate range. Outfall components in the good range may be slightly damaged but are generally in a condition similar to when they were installed.

Because this assessment is of the integrity of the structure itself and not the design, per se, there exists the situation where all of the outfall components may have GCR's in the good range but the outfall may be causing downstream damage due to its design. This situation was noted in *Section G - Comments,* as it occurred.

Section E

Section E recorded the basic data related to the condition of the receiving channel; most of the fields are self explanatory. However delta, nick point, head cut, woody debris and scour were interpreted in a specific manner with respect to this project. The following table describes how they were used:

Delta	The accumulation of sediment in the immediate vicinity of the outfall.
Nick Point	Sharp, vertical change in grade in the stream bed in a *flowing* stream.
Head Cut	Sharp, vertical change in grade in the stream bed in a *dry* channel.
Woody Debris	Woody matter that has collected to form "dams" in the stream channel.
Scour	The depression that has been created at the point where water leaves the pipe and enters the stream.

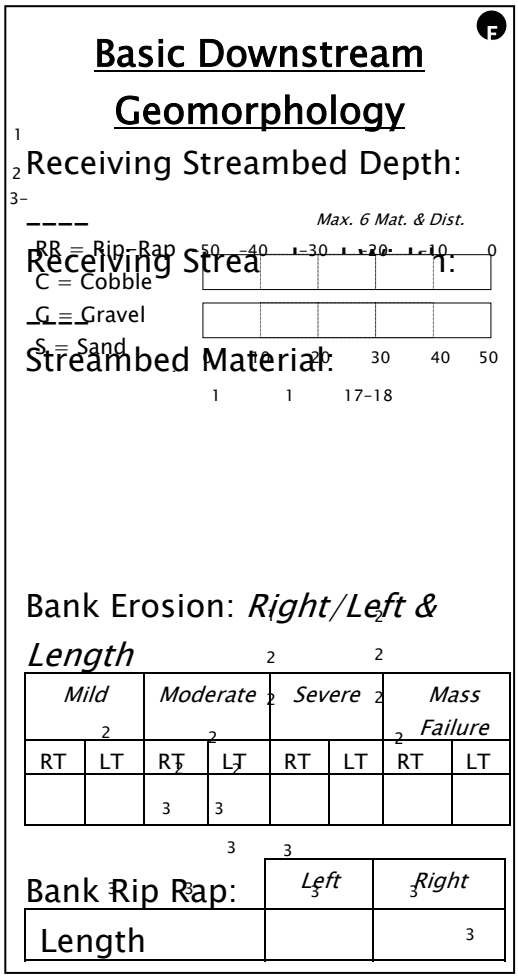

For situations where the condition of the stream channel was greatly deteriorated or did not seem to directly reflect or correlate with the condition of the outfall, the site was noted for additional geomorphic review by SMRC. Information provided by SMRC on these outfalls helped the Project Team to better understand the interaction between the outfall and the stream channel and supported the development of the prioritization methodology.

Section F

For each outfall a variety of photographs were taken to document the existing conditions. The fields in Section F recorded the total number of Photos taken and their orientation with respect to the outfall. Because digital photos were taken, they were reviewed in the field and the most representative photo was selected as the preferred photo. The preferred photo is presented on the Outfall Summary Sheet; all other photos are located *Volume 2: Mapping and Data*. The photos are named and numbered sequentially based on the outfall name.

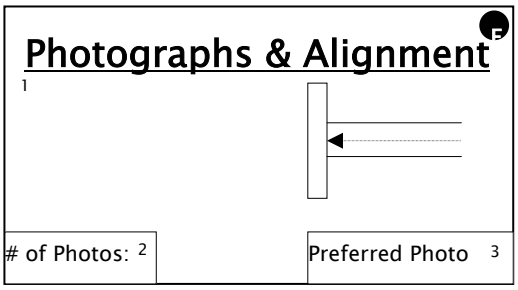

Section F proved to be a convenient place to also note the orientation of the receiving channel with respect to the outfall. This data was sketched in the field and described with text in the database.

Section G

Inevitably there were conditions and/or data that did not fit neatly into the data form. Section G was use record such data. The most significant piece of data collected here was whether or not an outfall pipe was cantilevered. The cantilevered state of a pipe turned out to be one of the driving decision making and prioritizing criteria.

Section G was a convenient place to collect other types of “soft” data such as conversations with adjacent land owners, site safety concerns, access description, ancillary infrastructure concerns, etc.

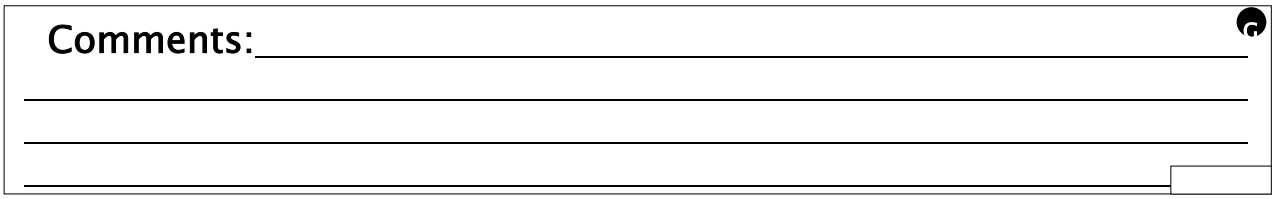

Geomorphic Assessment

Following initial assessment of basic channel conditions by the Project Team, eleven of these outfall sites were identified for more detailed geomorphic review by SMRC. These outfalls sites were selected as representative of a range of failure conditions potentially related to geologic and/or geomorphic conditions at the site. Identification of the conditions and risk factors in this small subset of outfall structures can provide the information necessary to develop proactive inspection and management strategies for other outfalls in similar land-use, geologic and/or geomorphic settings. The map below shows the location of each outfall site assessed by SMRC.

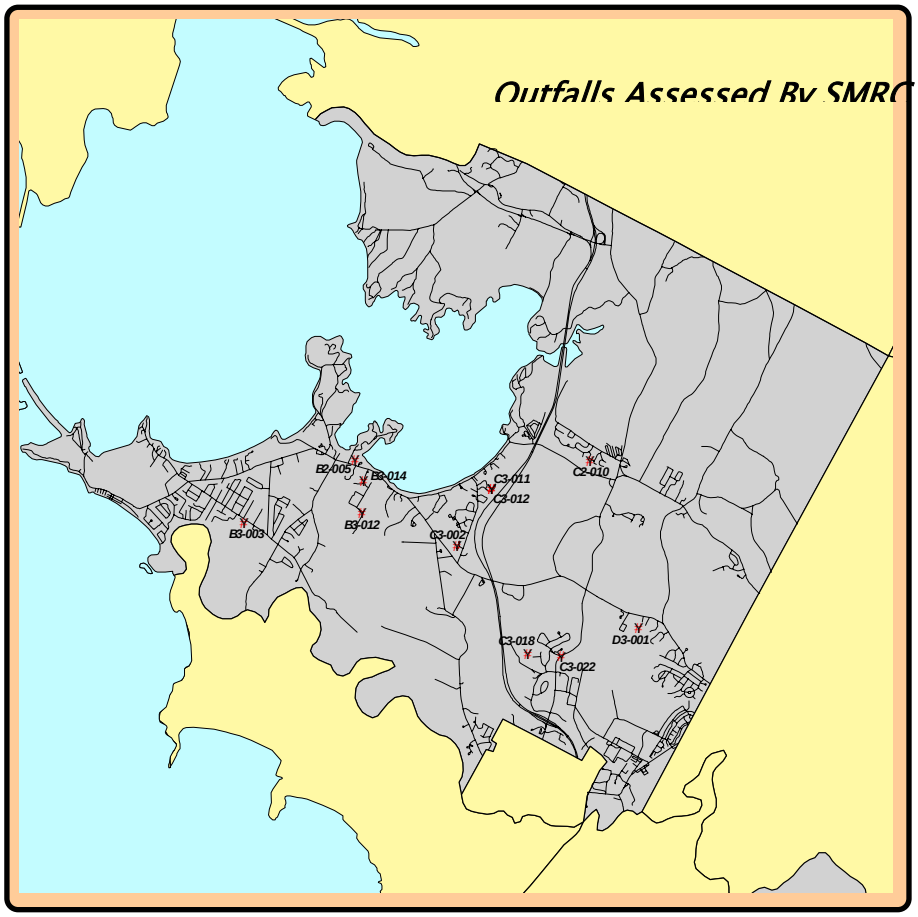

This additional review consisted of a review of existing data (topographic maps, orthophotos, soil surveys, and surfical geologic maps, etc.) and additional field visit by SMRC and ESI Staff. Additional stream bed and soils condition data were collected along with additional photos of specific failure modes. Detailed fact sheets that summarize each site visit are present in Volume II: Mapping and Data.

These assessments identified general geologic and geomorphic conditions at these sites which may contribute to destabilization of the area surrounding an outfall structure. The table on page 12

summarizes typical conditions associated with outfall and/or channel conditions at the outfalls assessed by SMRC. Often, more than one channel condition contributed to destabilization of an outfall site; and likely resulted from one or more instability triggers caused by multiple runoff events. Although this table does not necessarily reflect all channel conditions impacting stormwater outfall structures in Colchester, it covers a majority of conditions that may be encountered.

Typical Conditions Associated with Compromised Structures

Conditions Associated with Compromised Structures	Contributing Factors
Scour *Scour is the active creation a "hole" at the point where water leaves the pipe/conduit and reenters a drainage channel. This action can result in undermining and/or outflanking of constructed outfall structures and/or components.*	- excessive hydraulic energy - vertical drop from outfall invert - inadequate structure elements - presence of erosive soils
Headcut *Channel headcut migrating upchannel to undermine and/or outflank the Outfall structure components*	- excessive hydraulic energy - erosive soils/ sediments - steep slopes - inadequate design elements - regional or localized geomorphic setting
Overland runoff *around and over the Outfall structure which erodes and destabilizes soils/ sediments surrounding the Outfall structure and causes structural components (wingwalls, culverts) to be outflanked and/or undermined*	- excessive hydraulic energy - seepage forces - erosive soils/ sediments - inadequate design elements
Geotechnical Instabilities *of soils/ sediments surrounding the Outfall structure contributing to slope failure adjacent to the Outfall structure and associated armoring*	- mass failures (shallow, slab, block, rotational, cantilever, flow, etc.) resulting from the interaction of groundwater with the stream banks (ie. layered lithologies of varying permeability, excessive bank heights, etc.)
Design *conditions, or construction not to specification*	- vertical drop from outfall invert to channel - unmanaged overland runoff - undersized conveyance structures - undersized/substandard armoring - incorrect placement of armoring - lack of energy dissipating features

Causal factors are site conditions that contribute to instability and can be natural, anthropogenic or a combination of both. Typically casual factors are categorized as hydraulic, geologic, design-related, or land use related. While causal factors are grouped in these separate categories for clarity of presentation, it is important to note that natural and anthropogenic conditions often co-exist and are interdependent. The following tables provide descriptions of typical causal factors encountered.

Hydraulic and Geologic Causal Factors	
Causal Factors	**Examples**
Increased hydraulic energy, resulting from either a change in the size or runoff characteristics of the catchment area to the outfall structure, or changes in slope.	▪ increased % imperviousness associated with development, resulting in increased magnitudes and peaks of runoff from the catchment area for the outfall structure; ▪ diversion or redirection of stormwater flows, resulting in an increase in the catchment area for the outfall structure, and/or increased slopes; ▪ increased frequency and/or magnitude of precipitation and/or snowmelt events, resulting in increased runoff from the catchment area for the outfall structure; ▪ increases in slope of outfall system by decreasing head / base level elevations at outlets and/or increasing head / base level elevations at inlets.
Erosive soils / sediments in close proximity to the outfall and in the channel which receives the stormwater flows. Certain soil types are more erodible than others in the presence of concentrated stormwater flows. Erodible soils in the channel bed or banks can contribute to a variety of failure scenarios. Mobilization of sediments from the bed or banks will depend on the velocity of the flowing water and the shear stresses imparted at the water / sediment interface, sediment grain sizes, and the degree of cohesion, among other variables.	▪ Sediment and/or armoring material (e.g., rip-rap) in the receiving channel is undersized with respect to the stormwater flow velocities. This condition can occur predominantly, or transiently during certain less-frequent, high-magnitude runoff events. ▪ Sediment and/or rip-rap in the receiving channel, *becomes* undersized (able to be mobilized) when changes in the catchment area result in increased hydraulic energy.
Excessive vertical drop from outfall invert to receiving swale/channel. The erosive power of the stormwater falling under influence of gravity from the outfall structure to impact the receiving channel is directly proportional to the vertical distance between the outfall invert and the bed of the receiving channel.	▪ Excessive scour at the outfall either laterally or vertically, or both, as dependent on the size of sediments represented in the receiving channel, their erodibility and cohesiveness. ▪ Scour can create oversteepened banks
Mass Failures/Oversteeped banks often result from channel bank erosion and lateral scour in erosive sediments by stormwater flows in the channel. This can also result from vertical scour or a drop in elevation of the channel bed. The bank will collapse, once it exceeds a critical height for the given grain size, layering, cohesion, water content, and other soil properties.	▪ Failure of an oversteepened bank can result in undermining of the structure or blockage of the stormwater outfall by sediments and/or vegetation from the collapsed bank. Diversion of stormwater flow around this blockage can further erode side slopes of the channel.
Groundwater-related failures – shallow or perched groundwater interacting with the stormwater channel and/or outfall	▪ Recharge infiltrating through a shallow layer of more permeable sediments (e.g., sands and gravels), reaches a subsurface less permeable layer (e.g., silts or glacial till), creating a perched water table. Perched groundwater may then flow preferentially along the interface between the two sediment layers and exit at the face of a vertical or subvertical slope. Groundwater seepage forces can result in failure of channel banks, through piping, slab, flow, or rotational failures. If this destabilized slope is associated with an outfall structure, it may contribute to undermining and destabilization of the outfall structure, itself. ▪ Development (e.g., foundation drain discharge, septic discharge) can locally increase recharge to soils, exacerbating slope failures caused by groundwater seepage or increased loading and pore water pressures.
Regional geomorphologic setting like instabilities in the stream channel which ultimately receives runoff from the outfall structure, may influence the stability of the stormwater channel, and the outfall structure itself.	▪ If the receiving stream channel is incised and dropping its stream bed elevation (due to other factors not related to the outfall structure), this drop in base level at the receiving stream, may initiate headcutting in the stormwater channel. If unchecked by bedrock or other structural controls, this headcutting can migrate up-channel, destabilize the banks of the stormwater channel, and potentially undermine the outfall structure directly.

With regard to design-related causal factors, it is important to recognize that in the engineering of stormwater structures, the adequacy of a given design is time-sensitive. For example, the specification of a given size armoring material or culvert size may be adequate upon initial installation. However, in subsequent years, increased development in the catchment area may significantly increase hydraulic loading to that structure. Storm flows of higher magnitude and duration may then overwhelm the receiving channel, perhaps exceeding critical erosive velocities, initiating one or more failure conditions.

The outfall structures were classified into two categories based on the method by which they discharge to receiving channels or surface water bodies: Indirect or Direct. Stormwater conveyed via an *indirect* discharge flows to ephemeral swales or detention basins which are predominantly dry; except during a storm event. Stormwater in some, but not all, of these indirect drainage structures flows subsequently to open water bodies. However, depending on the volume of stormwater generated by a given precipitation event, stormwater may infiltrate directly to groundwater. *Direct* discharges convey stormwater to perennial streams, intermittent streams, or to water bodies (Lake Champlain, Winooski

Design-related Causal Factors	
Causal Factor	***Examples***
Excessive vertical drop from outfall invert to receiving swale / channel. The erosive power of the stormwater impacting a receiving channel after falling under influence of gravity from the outfall structure is directly proportional to the vertical distance between the Outfall invert and the bed of the receiving channel.	▪ Scour at the outfall, either laterally or vertically, or both, as dependent on the size of sediments represented in the receiving channel and their erodibility. ▪ Scour can create **oversteepend banks**
Unmanaged overland runoff to vicinity of outfall structure; Inadequate capture and diversion of stormwater flow.	▪ Can be caused by progressive failure of the outfall structure itself (from other causes) which drops the elevation of the structure and creates a new low spot for vicinity sheet drainage to flow to; ▪ Can be the result of new development or construction which changes the pattern of surface runoff in the vicinity of the structure, post installation.
Inadequate sizing of stormwater conveyance.	▪ Structure undersized for the given catchment area at the time of installation; ▪ Over time, structure becomes undersized for the given application, due to: 1) added development in the catchment area resulting in increased impervious (and effective impervious) area, greater volumes of runoff, and more frequent stormwater runoff events; 2) diversion of additional stormwater flows due to development.
Inadequate sizing or material specifications for outfall armoring.	▪ Rip-rap may be too small for the design flows of the structure and therefore is mobilized during storm flows; ▪ Design flows of the structure can be exceeded by unanticipated increases in runoff volumes, velocities and frequencies;
Inadequate placement of armoring, keyed laterally and vertically to the natural materials in the receiving channel or swale. **Lack of energy dissipating structures / mechanisms.**	▪ Armoring (e.g., rip-rap and geotextiles) may not be installed far enough in cross section in the receiving channel to address higher-velocity flows. Stormwater flows then outflank and undermine the armoring laterally and carve a new channel at a lower elevation into more erodible native materials. ▪ Armoring may not extend longitudinally far enough in the receiving stormwater channel, and measures may not have been taken to adequately dissipate hydraulic energies, resulting in erosion at the interface between the armoring and the native, more erodible sediments. Erosion at this interface can undermine the armoring. A headcut may migrate upchannel to further destabilize banks and armoring and eventually impact the outfall structure directly.

River wetlands, wet detention basins, etc.).

Characteristics of each outfall and the receiving water body are summarized in Table A.1 and A.2 in Volume 2. The receiving water body for each outfall was identified based on a review of topographic maps and orthophotos and then confirmed via field inspections. Table A.1 includes a calculation of expected channel widths and depths of the receiving streams, based on the drainage area above the confluence of the stormwater outfall with the stream. Expected channel dimensions were calculated using Vermont Regional Hydraulic Geometry Curves (VT RHGCs) developed by the Vermont Water Quality Division (Provisional, 2001) which were based on watersheds ranging from 9 to 139 square miles. Because, with the exception of Indian Brook, each drainage area assessed was less than 1 square mile, the expected widths calculated herein can only be considered for reference and/or informational purposes.

Each outfall channel was assessed from the outfall structure to the confluence with a receiving water body (where applicable). The approximate length of outfall channel was noted. Where possible, the receiving stream was inspected for a minimum distance of 50 feet upstream and 50 feet downstream of the outfall channel confluence. Observations of stream channel features were made, noting signs of channel degradation, aggradation, over-widening and /or plan-form adjustment. Limited geomorphic assessments were conducted per the Vermont Agency of Natural Resources, Phase 2 Stream Geomorphic Assessment Protocols (April 2002 draft). Riffle cross-sections were measured to determine bankfull width, thalweg depth, and flood prone width. Where applicable, receiving stream channel dimensions were compared with expected dimensions to qualitatively assess the potential impact of stormwater discharges on geomorphic condition of the receiving channel, or vice versa.

On the basis of field inspections and review of existing data, the apparent conditions associated with outfall channel erosion and outfall structure failure were noted. The degree of receiving channel erosion and sedimentation were ranked: low, moderate, or high and are summarized in Table A.3 of Volume 2. This information was used by the Project Team to better understand and quantify the geomorphic context and outfall failure modes observed throughout the Town.

Limitations of Assessment

Complete geomorphic and geotechnical assessments of outfall channel conditions and identification of specific causes for channel erosion influencing failure of outfall structures was beyond the scope of this study. Furthermore, this assessment was conducted without original design drawings or as-builts. Additionally, approximations were used with respect to the size, delineation and/or land use of the catchment area related to each structure.

To address the specific prioritization goals of this Project, a decision-making algorithm was developed to analyze the volumes of data collected. This analysis combines the collected data with data generated by other related Town projects and information available from the State of Vermont to make decisions related to improvement priorities. These priorities were founded on the following simple question:

"If the Town were to work to improve an outfall today ... which one should it start with?"

and subsequently:

" ... when it is done with that one, where should it go next?"

To address these questions a decision making *algorithm* was developed that assigned values to various data components. These values were balanced against each other and then totaled, resulting in a *Priority Score* that reflects the level of priority for improvement. A Priority Score of 100 represents the highest priority and a score of 3.5 the lowest.

The intent of the algorithm is not only to provide direction to the Town but also to provide documentation of the decision making process. Thus, as time goes by and laws and regulations change, the Town can review the established decision making criteria and adjust their values to account for these changes in the revised social/political environment. Also, as certain outfalls are repaired/improved, and the new outfall conditions are updated in the database, the Town-wide priorities will automatically be updated.

Prioritization Algorithm

The algorithm starts by asking three questions:

Is the outfall condition an imminent threat to human welfare?

Does the condition of the outfall meet the Town's established Environmental Goals?

Does the condition of the outfall meet the Town's established Infrastructure Goals?

These three questions define the core of the decision making process. The following sections describe how the algorithm attempts to answer each question and how the answers to these questions work together to provide guidance on the overall question of "*what do we do first?*". It may be helpful to review the algorithm prior to reading these sections.

Stormwater Outfalls – Prioritization

Imminent Threat to Human Welfare? Yes = 90

Algorithm

Environmental Goals

Watershed Destination?
Inner Mallets Bay = 10.5
Outer Mallets Bay = Add 8.4
Other = 3.5
15%

+

Impaired Watershed?
Yes = 17.5 No = 0
25%

+

Watershed Priority from SWMP

High	add 3.5
Moderate	add 2.1
Low	add 0

5%

+

Stream Bank Erosion

None	add 0
Low	add 2.8
Moderate	add 5.6
Severe	add 10.5

15%

+

Gross Failure

Yes	28
No	0

40%

=

Environmental Goal Score
Maximum Score = 70

Infrastructure Goals

Pipe Condition

0-1.5	9	
1.5-3.5	3	
3.5-5	0	**30%**

+

Pipe Cantilevered?

Yes	9	
No	0	**30%**

+

Minimum Back Fill GCR?

0-1.5	7.5	
1.5-3.5	3	
3.5 - 5	0	**25%**

+

Minimum Headwall or Wingwall GCR?

0-1.5	4.5	
1.5-3.5	3	
3.5 - 5	0	**15%**

=

Infrastructure Goal Score
Maximum Score = 30

Priority Action Scale

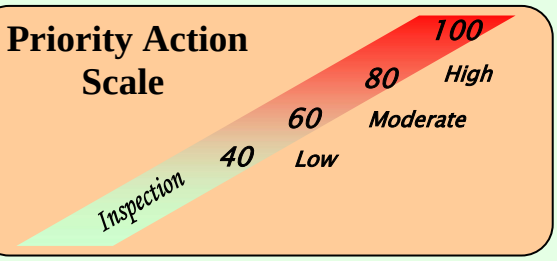

Priority Score
Environmental Goal Score
+
Infrastructure Goal Score
Maximum Score = 100

Threat to Human Welfare?

For each outfall, the Project Team assessed the area immediately surrounding the outfall to determine if the condition of the outfall presented an imminent threat to human welfare. Generally, a threat constituted a failure mode at the outfall (or the immediately downstream) that would cause the loss of or significant damage to life, livelihood or personal property. If a site is determined to be a threat, it would immediately receive a score of 90 (bypassing the other decision making criteria) and thus become a "High Priority."

Although we observed many significantly deteriorated conditions, in the opinion of the Project Team, none constituted an imminent threat to human welfare. This, however, does not mean that a failure may occur that would damage the downstream environment.

Environmental Goals Score

Because the overreaching goal of this project is to provide the Town with the information and tools to improve water quality, 70 percent of the decision making procedure is based on *Environmental Goals*. The following criteria were developed by the Project Team based on the data developed by this project and other available data to comprise the Environmental Goal Score (EGS). As additional data becomes available over time, additional criteria may be added by the Town.

Notice that each decision component has a "percentage" associated with it and each potential decision result has been assigned a value. The percentages represent the percent of the total available points for the Goal category and the points represent the resulting score value. See *Watershed Destination* below for an example.

Watershed Destination?

Because Mallets Bay is a significant natural, cultural and economic resource to the Town, 15% of the Environmental Goal Score is attributed to the destination of flow from an outfall. Because 70 out of 100 points are available for the Environmental Goal Score, the maximum score possible for this criterion is 15% of 70. This results in 10.5 points being added if the outfall discharges to a watershed that drains to Inner Mallets Bay. If the outfall discharges to a watershed that drains to Outer Mallets Bay, 80% of the total available points are assigned: 80% × 10.5 = 8.4. Otherwise, 33% of the total points are given, 3.5.

The presence of score values of 2.8 or 5.6 may appear odd in the algorithm; however, this is a result of balancing the scoring system such that it is normalized to a 100 point scale. Additionally, all of these values are calculated and stored in the project database, thus allowing for simple adjustment and modification of the values to change the "importance" of each decision making criterion.

Impaired Watershed?

The impaired status of a watershed is managed by the State of Vermont via EPA 303d listing. This list not only identifies the impaired watershed but also indicates the cause of impairment. For the purposes of this report, we have consider only those watersheds with impairments due to stormwater to be "Impaired."

Outfalls that discharge to impaired watersheds were assigned 25% of the EGS. This serves to focus the Town's efforts on areas where there are clearly recognized water quality concerns that have been directly related to stormwater runoff.

Watershed Priority?

The *2002 Town of Colchester Stormwater Management Plan* (SWMP) analyzed each watershed in Town and prioritized them based on a variety of data relating to their need for improvement and their ability to respond favorably to improvements. Although an important index, because this scoring system was primarily based on inferred or calculated data as opposed to directly measured data, we have chosen to allow it to control only 5% of the EGS. If the SWMP is updated to increase the confidence in the index, the influence of this criterion should be increased.

Stream Bank Erosion?

The severity of stream bank erosion is an indicator of the general stability of the receiving channel, particularly under peak flow conditions. Although an indicator of failure conditions, often the stability of the channel is predominantly controlled by upstream conditions unrelated to the outfall itself. Therefore, recognizing that outfall improvements will not likely hurt the situation but that improvements to the structure also may not directly correct the bank failure condition, we have allowed this criterion to control 15% of the EGS.

Gross Failure?

Gross failure is the most subjective criterion that supports the EGS but is also the most important, controlling 40% of the EGS. Gross failure was not necessarily a "measurable" condition and as such, gross failure conditions were usually noted in the Section G - Comments. There were often outfall sites where the outfall structure was stable and in good condition but due to the energy of the discharge, the immediate vicinity downstream was characterized by erosion and scour too extensive to effectively measure and thus these conditions were not accurately represented in the database. For example, there were outfall locations where the scour around the outfall hade become so extreme that it was not measurable and thus would be considered a "gross failure."

Infrastructure Goals Score

Because the condition of the outfall itself frequently does not directly correlate to potential downstream impacts, the Infrastructure Goals Score (IGS) only controls 30% of total Priority Score. The following paragraphs describe each of the criteria that comprise the IGS.

Pipe Condition

The only structural component that was common to each outfall was the presence of the pipe. Therefore, ±30% of the IGS is based on the condition of the pipe. GCR's in the 0-1.4 range receive 9 points and those in the 1.5-3.4 range receive 3 points. Those outfalls with pipes that received a "good" rating received no points.

Pipe Cantilevered?

In an attempt to incorporate the "design" of the outfall into the algorithm, the "cantilevered" status of the pipe was included as a decision making criterion. The excessive energy related to the impact of water falling from a cantilevered pipe can be an indicator of a variety of problems with both the structure and the receiving channel. Therefore, a cantilevered pipe was assigned 30% of the IGS or 9 points.

Minimum Backfill GCR

Damage to backfill can also be an indicator of structural instability. Therefore, 25% of the IGS is based on the minimum GCR identified for the backfill behind the wing walls and headwall. A GCR in the poor range receives 7.5 points and a GCR in the adequate range receives 3 points. "Good" backfill receives 0.

Minimum Headwall/Wingwall GCR

Because the majority of outfalls did not have any type of headwall or wingwall structure, the condition of these components was limited to 15% of the IGS (*or 4.5% of the total Priority Score*). Outfalls with a minimum headwall/wingwall GCR in the "poor" range received 4.5 points, those in the adequate range received 3 points and those assessed as "good" received no points. Those outfalls without wingwalls were considered to have a minimum GCR of 0 and received 4.5 points.

Priority Action Scale

Now that we have calculated an EGS and an IGS, they can be combined to create the *Priority Action Score (PAS)*. This score is the total of the EGS and the IGS and provides a quantitative method of comparing the condition and need for action at each outfall. Because many other factors may affect the decision making process (available budget, town forces, land access, etc.) that were not incorporated in this model, the scores were lumped into three ranges that indicate priority. The Town can use these ranges as a guide when deciding which projects to implement.

High Priority

High priority outfalls are those with a PAS of 80 or greater. Outfalls are characterized by a mix of gross failures, generally deteriorated conditions and conditions that threaten the health and welfare of the community. Outfalls in this category are a combination of outfalls that were prioritized based on the combination of environmental conditions and structural conditions and those that bypassed the decision making process due to conditions that are of immanent threat.

Moderate Priority

Moderate priority outfalls have symptoms or characteristics that, if left unattended, will continue to deteriorate but the resulting damage is not likely to be significantly threatening. A PAS of between 60 and 79.9 represents a moderate priority.

Low Priority

Outfalls identified as low priorities have a PAS of 40-59.9 and may have significant problems as a structure but may not be located in an impaired watershed or one that is as vulnerable to the damage, etc (as defined and weighted by the algorithm). The Town should remain cognizant of these outfalls and take actions that could prevent further deterioration.

Inspection

The remaining outfalls, those with a PAS of less than 39.9, are identified for inspection only. See the Prevention and Inspection chapter for a description of the inspection protocol. Based on the condition of the structure and the channel conditions, it is expected that these outfalls will be stable for the foreseeable future but should be regularly monitored by an inspection protocol.

Algorithm Results

The result of the Prioritization Algorithm is a prioritization score for each outfall; based on the need for improvement action. Appendix B contains the Priority Action List which is sorted by Priority Ranking and also shows the Inspection Schedule and estimated improvement cost. This was placed in the appendix to facilitate easy reference and updating. The following table offers a summary of the prioritization results based on the outfall conditions at the time of this report:

Overall Prioritization Summary

Priority Ranking	*Number of Outfalls*	*Cost*
High Priority	6	$55,900
Medium Priority	6	$74,500
Low Priority	11	*pending*
Inspection Only	106	*n/a*

Outfalls in Watersheds that Drain to Inner Mallett's Bay

Priority Class	Number of Outfalls
High	1
Medium	4
Low	2
Inspection	50
Do not drain to Mallets Bay	72

Outfalls in 303(d) Stormwater Impaired Watersheds

(Sunderland and Morehouse)

Priority Class	Number of oufalls
High	2
Medium	3
Low	12
Inspection	34
Not in an Impaired Watershed	78

Costs and Improvement Recommendations

Although it seems reasonable to include improvement costs in the decision making algorithm, we chose to remove it as a decision making criterion for two reasons. First, the fact that an outfall structure or the receiving channel are in a deteriorated state is not affected by the amount of money needed to fix it. This Priority Action List is a reflection of the conditions of the infrastructure unbiased by the financial condition of the Town, State or Federal Government. Second, because we have no ability to control for budget or staffing fluctuations over the life of these recommendations, the priorities were grouped as High, Moderate, Low and Inspection priorities. Thus, the Town can review the outfalls in each priority grouping and make decisions based on currently available funds and grants. This provides the Town with the ability to balance expenditures on stormwater infrastructure with the other demands on the Town budget.

The cost of improvements was calculated for outfalls that scored in the High and Moderate priority groupings. Appendix A contains a set of typical improvement techniques/details and their associated costs. These were used to develop cost estimates and provide the Town with an approach to improving outfalls. Appendix B contains the Priority Action List which lists those outfalls grouped as High or Moderate Priority. For each outfall in these categories, the backside of the Outfall Fact Sheets in Volume 3 provides additional information regarding the suggested improvements.

It must be stressed that these cost estimates are solely for planning purposes. Because of the limited information available for each outfall, gross approximations were used when determining the scope and cost of improvement. More detailed cost estimates will need to be developed during the design process.

So far, this report has focused on relatively "reactionary" approaches to addressing issues related stormwater outfalls. In an attempt to be proactive, the following sections outline general approaches for the prevention of future outfall failure and the subsequent impacts to water quality. The *Prevention* section deals with protocols and policies that can create an administrative infrastructure that can aid in the protection of water quality. The subsequent section, *Inspection*, provides a detailed outline of an inspection protocol that can be utilized to maintain the outfalls database with a minimum of effort by the Town.

Prevention

Most, if not all of the failing outfall conditions in Town could have been prevented. Because outfalls are constructed infrastructure, there was a time when a better decisions could have been made with respect to its design, siting, maintenance, etc. The following paragraphs recommend some general approaches to improving these conditions that are within the jurisdiction of the Town.

As-builts

For all land development projects where the Town will become the owner of the infrastructure being built or will receive runoff from the site, as-built drawings need to be produced and stamped by a licensed professional engineer. These plans will not only attest to the final layout of the constructed feature but also certify that the feature will function as designed (or at a minimum, in accordance with current regulations). These drawings need to be submitted to and *approved* by the Town engineer prior to acceptance of the project. This will provide the opportunity for the Town to ensure that the infrastructure that it is acquiring (or interacts with) meets the requirements of the Town.

Outfall Design Criteria

Because of the widely varying soil conditions in Colchester, "standard" design approaches to outfalls cannot be used universally. The sandy soils prevalent in the southern half of Colchester are very sensitive to the erosive power of runoff whereas the northern half of Town is characterized by clays that are more resistant to such forces. However, concentrated and uncontrolled flows can cause severe damage in any location.

The primary design features that we noticed that caused deterioration of outfalls were:

1) Excessive conduit slope;
2) Excessive receiving channel slope and
3) Excessive vertical drop from conduit to channel.

Additionally, based on an analysis of scour depths and widths of outfalls, it appears that standard approaches to outfall armoring are not adequate in the soft soils of Colchester. For example, the overall dimensions (width and length) of the standard VTrans (Vermont Agency of Transportation) outfall

energy dissipation pad nearly match the dimensions of the scour conditions measured in the field, thus leaving no room for error (or nature). When this "standard" approach appeared to be used under the above mentioned conditions, failure was common.

Appendix A to this report contains sample designs that incorporate design features which address these three conditions and increase the overall size of the pads to accommodate scour. These detail are tailored to three specific outfall site conditions but can (and should) be further modified to meet site conditions as they are encountered. The goal underlying each of these designs is to better control and minimize the energy of the water being discharged to a stream channel. To this end, these designs limit the slope of the conduit and the receiving channel to 2%. The natural result of this is that longer pipe runs will be needed to reach acceptable slope conditions. Additionally, this will result in outfalls being located closer to stream channel, thus necessitating special attention to ensure that the outfall does not constrict or otherwise compromise natural stream flow.

Site Design

The southern half of Colchester is crisscrossed by natural sand ravines and drainages that are surrounded by relatively flat plateaus. Sheet runoff naturally flows from these plateaus as a distributed flow along the length of these ravines. However, as the land on these plateaus is developed, these distributed flow paths are typically diverted, concentrated and discharged at a single point within the ravine. This has effectively removed water from the stream channel in one section and overloaded it another.

The focus of this project has been on improving the conditions at the discharge points of these collection systems. However, many of the conditions encountered could have been avoided if drainage had been more evenly distributed along the natural channels. Therefore, it is recommended that land development projects maximize the number of discharge points from the drainage system. Even if a project can double its points from one to two, the natural state of the stream will be better protected.

Inspection

Stormwater outfalls are often located just over the bank, just beyond the treeline or at the bottom of a hillside covered with vegetation. Thus, they are often "*out of sight and out of mind*." To ensure that the Town keeps tabs on the conditions of its outfalls an inspection schedule has been developed. An Inspection Algorithm was developed that sorts through the Outfall Database and assigns an inspection schedule to each outfall. The Algorithm is structured such that each outfall will be visited at least once every five years; and every year or every two years for those sites that are in locations subject to greater stress or risk. The following paragraphs describe how the algorithm works.

The algorithm basis its decision on four basic criteria:

Soils
Zoning
Watershed Impaired Status
Priority Score (*established by this report*)

These four criteria are balanced to generate a score between 0 and 100. Those outfalls with a score of 80 or more are scheduled for annual inspection; those of 60 or more are scheduled for every 2 years and those less than 60 are scheduled for inspection every 5 years.

Soils and Zoning
Although intuitive, it became clear through the assessment of Colchester's stormwater outfalls that land-use had a significant impact on outfall and streambed conditions. The zoning district that an outfall resides in not only provides insight into current land used but also serves to predict land use patterns. Therefore, those outfalls residing in zoning districts that allow for "dense" development are weighted to provide for more frequent inspection. "Zoning" controls 30% of the scheduling decision.

Zoning and Soils each represent 30% of the Inspection Score thus they control 60% of the inspection scheduling decision. These two factors uniquely provide insight into both the existing conditions at the site and the potential risk of future deterioration. For instance an outfall that is located in a densely developed area and is installed on highly erodible soils is likely to be in poor condition and should be inspected and monitored on a relatively frequent basis. Similarly, an outfall that is installed on highly erodible soils and is located in a zoning district that *allows* for dense development may be in stable condition today, but as development pressure increases it is susceptible to rapid deterioration. To facilitate this decision making process Colchester's zoning districts were grouped as follows:

Zoning Districts	***Grouping***
GD-1(1), GD-1(2), GD-2, GD-3	High Density Residential *30 Points*
Commercial Industrial	Commercial/Industrial *20 Points*
RR, R-10, R-1, R-2, R-3	Other *10 Points*

Watershed Impaired Status and Priority Score

The remaining 40% of the scheduling decision is controlled by the Impaired Status of the watershed (as assigned by the 303D List) that the outfall is located in and the Priority Score as determined by this report. Both of these criterions are based on processed data that is fluid and may change over time. However, both of these criteria are important when determining the importance of an outfall and thus the frequency of inspection.

Inspection Scheduling Algorithm

Soils — **30%**

Highly Erodible Land	30 points
Potentially Highly Erodible	15 points
Not Highly Erodible	0 points

+

Zoning — **30%**

High Density Residential	30 points
Commercial Industrial	20 points
Other	10 points

+

Impaired Status — **15%**

Impaired Watershed	15 points
Not Impaired	0 points

Priority Rating — **25%**

High Priority	25 points
Moderate Priority	20 points
Low Priority	10 points
Inspection	0 points

Total Possible Score = 100 points

0 ***Every 5 Years*** 60 ***Every 2 Years*** 80 ***Annual*** 100

Inspection Checklist

To facilitate the inspection of outfalls the Project Team has created a customized Inspection Checklist for each outfall. Each sheet has the name, location, inspection schedule and a photograph of the subject outfall. For each outfall, a set of data will be collected that will provide the Town the ability to understand the ongoing condition of the outfall. The back of each sheet also has an area for the inspector to make comments or note concerns that do not fit neatly in the table. Volume 4 of this report contains an inspection sheet for each outfall similar to the one below.

Town of Colchester
Stormwater Outfalls Inspection

A2-001

Outfall Name: ***HOLY CROSS***
Inspection Schedule: ***Every 5 Years***

Latitude: ***N 44°33'5"*** *Longitude:* ***W73°16'30"*** *Accuracy:* ***--- FT***

Invert to Stream Bed: in Inches
Scour Dimensions: in Feet
Bank Erosion: None; Mild; Moderate; Severe or Mass Failure

General Condition Rating (GCR)

0	1	2	3	4	5
	Poor		*Adequate*		*Good*

				Scour Hole			Bank Erosion			
Date	Staff	Flowing?	Invert to Streambed	Width	Depth	Length	Right	Left	Photo	Overall GCR

Engineered Solutions, Inc. P.O. Box 4628, Burlington, VT 05406 (802) 658-2445 www.esivt.com

Conclusion

The volume of data collected by this project combined with the inherent complexity of stormwater issues could lead to a wide variety of conclusions. However, we have attempted to remain focused on the physical condition of each outfall, its apparent effect on downstream conditions and the creation of a data structure that can support future decision making. The *Outfall Database.xls* spreadsheet contains 20,640 discrete pieces of data that describe the location, condition, improvement needs, costs, priority, inspection schedule, etc. It is our hope that this database will become the core of Colchester's stormwater management system.

The data structure was designed specifically for flexibility. In the generation of this report we linked this database to text documents to generate summary sheets and to a GIS to generate mapping. Hopefully, this database will be updated overtime such that new maps and other documents can be created that document Colchester's progress in water quality improvement.

Existing Conditions

The good news is that the *vast* majority of outfalls in Colchester are stable and functional. Both the structure itself and the downstream conditions appear to be efficiently and appropriately conveying stormwater. However, the outfalls that are in bad shape are in very bad shape and require treatment sooner rather than later. The Action Priority List in Appendix B summarizes these outfalls and lists the estimated costs associated with improvement.

The major factor in most of the High and Moderate Priority outfalls was the combination of fragile soil conditions and excessive discharge energy. The suggested improvements in Appendix A are conceptual approaches that address these issues. Generally, these design approaches attempt to decrease the energy at the outfall and increase the amount and size of armoring.

The Future

The Inspection Algorithm developed for this project provides the Town with at tool to establish an ongoing review of its stormwater infrastructure. This provides the backbone for the development of procedures and protocols that he Town can utilize to comply with EPA Phase II stormwater requirements. It also provides the opportunity to establish baseline data to qualitatively track changes in the Towns runoff patterns.

As important as it is to track change, it is even more important to prevent failure conditions. For any stormwater system that the Town may (someday) own, there needs to be a full review and approval of the stormwater system. This includes not only approval of the plans prior to construction but the requirement that as-built plans (stamped by a professional engineer) be submitted after construction.

The Town of Colchester has taken many proactive steps toward improving water quality with in its borders. We recognize that there are limits to the conclusions this report can offer, but it is our sincerest hope that it provides the data, methods and tools to support these ongoing efforts.

Improvement Concepts

and

Associated Costs

Disclaimer

The following diagrams and drawings represent conceptual designs only and are tailored to address soil stability issues prevalent in the Town of Colchester. They are intended for informational purposes only. Additionally, these concepts do not represent all possible solutions or approaches to outfall construction. Prior to implementation additional engineering and field data will be necessary.

	Estimated Cost
Outfall Reconstruction	
Type A - Headwall	$4,000 each
Type B - No Headwall	$2,500 each
Type C - Flared End Section	$2,000 each
Energy Dissipation	
Type A - Rip Rap Pad	$2,000 each
Type B - Infiltration Pad	$3,000 each
Type C - Rip Rap Check Dam	$2,000 each
Conveyance	
Standard Piping	$15/lf
Special Piping	$30/lf
Armoring	
Rip Rap	$10/sy
Soft Vegetation	$2/sy
Hard Vegetation	$1,000 each

Concept Type A Headwall	Estimated Cost $4,000

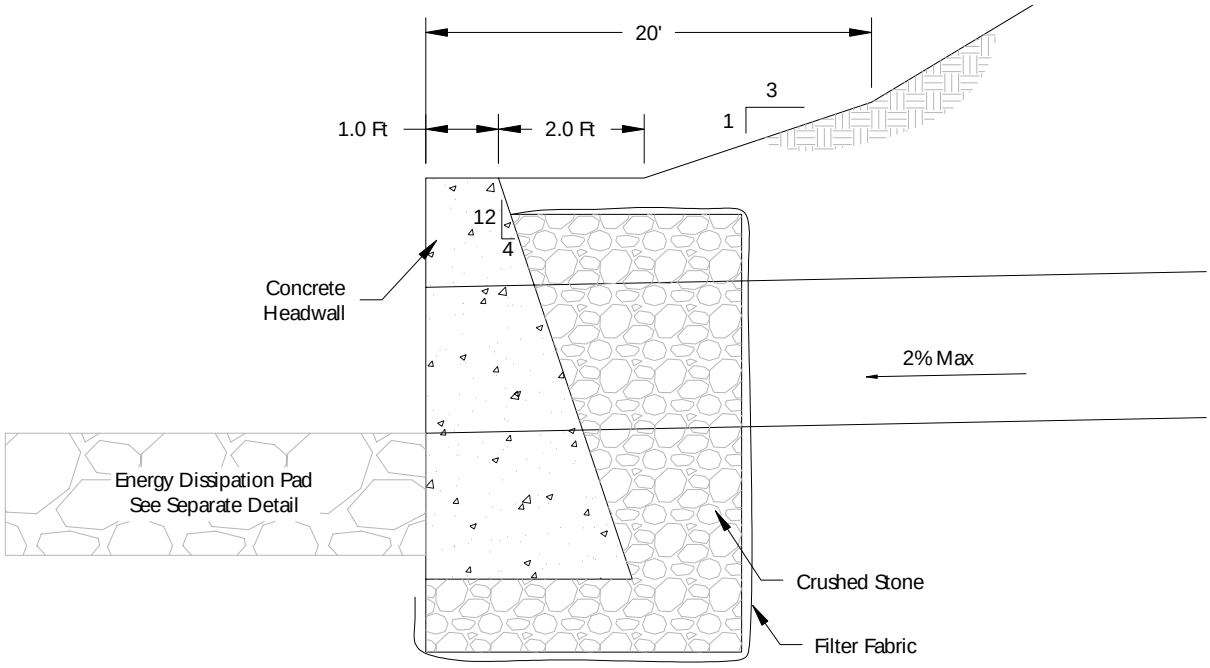

Cross Section

NOt to scale

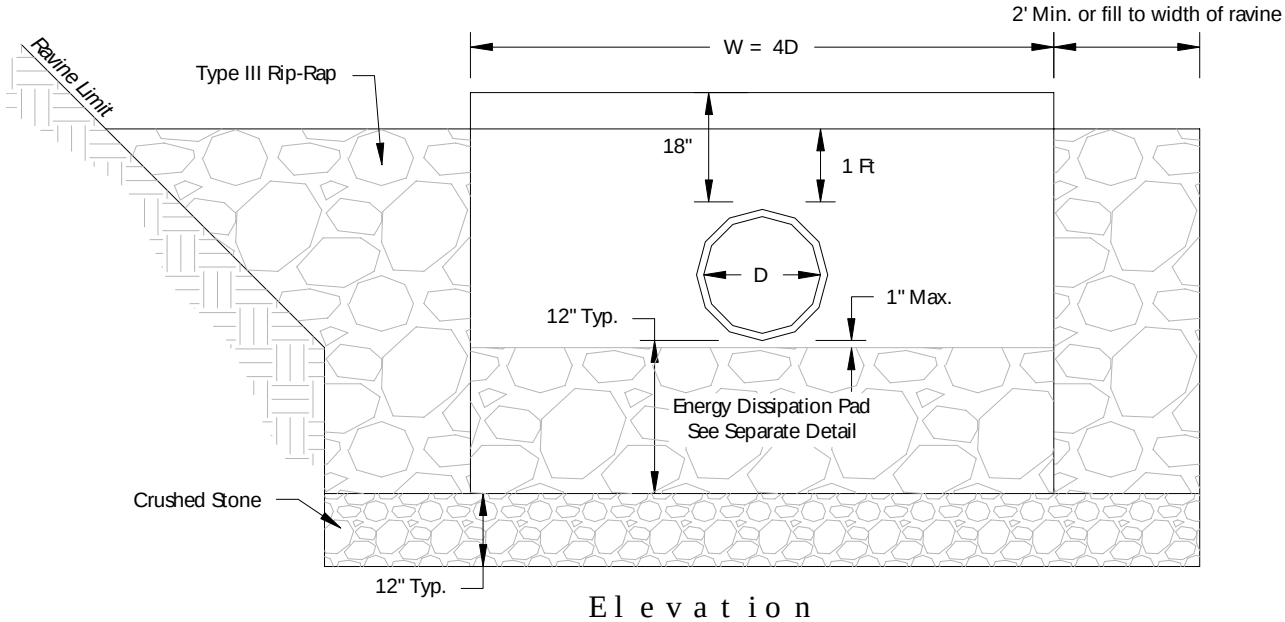

Elevation

Concept Type B No Headwall	Estimated Cost $2,500

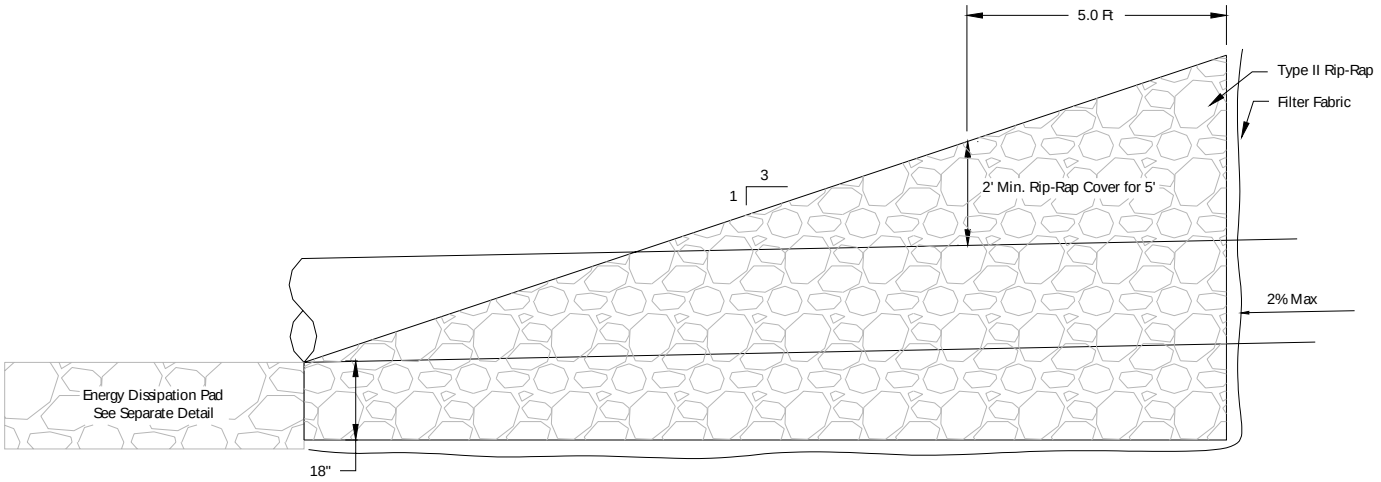

Cross Section
NOT to scale

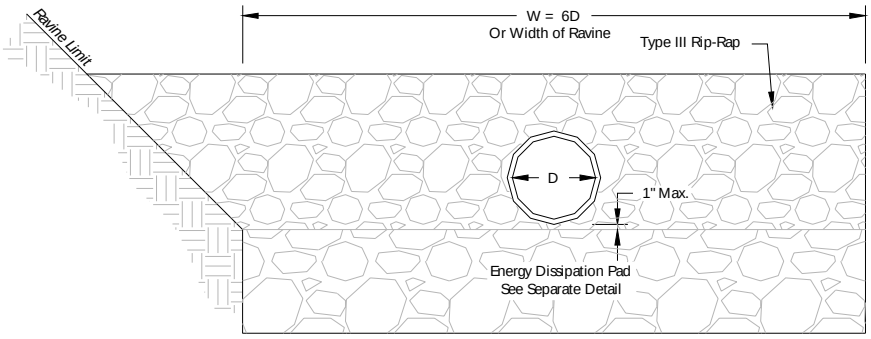

Elevation
NOT to scale

Concept Type C Flared End Section	Estimated Cost $2,000

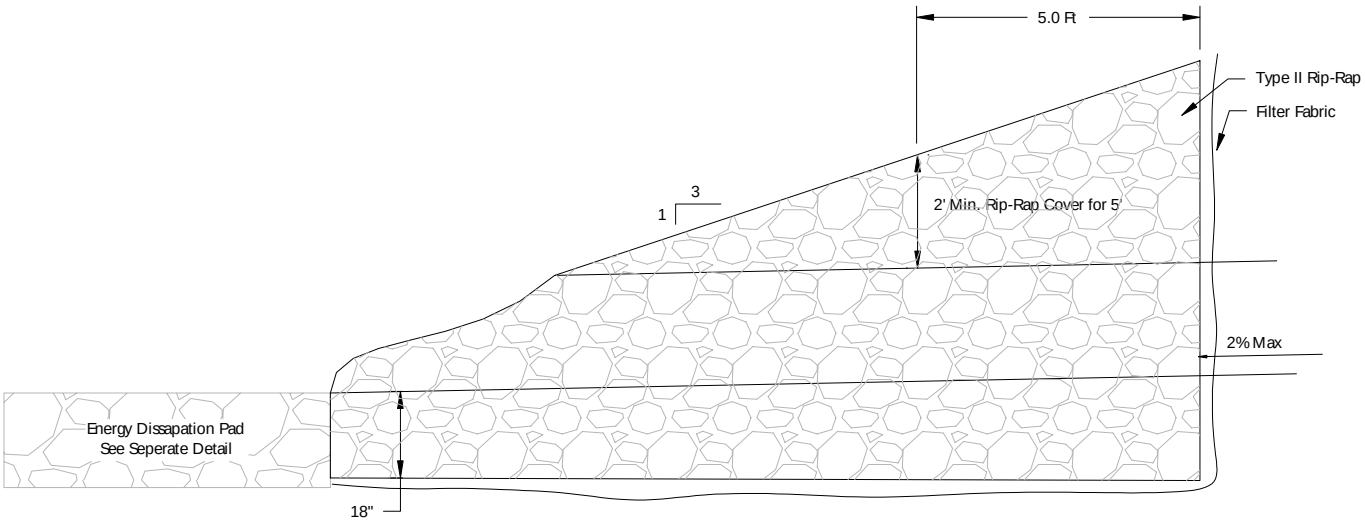

Cross Section
NOt to scale

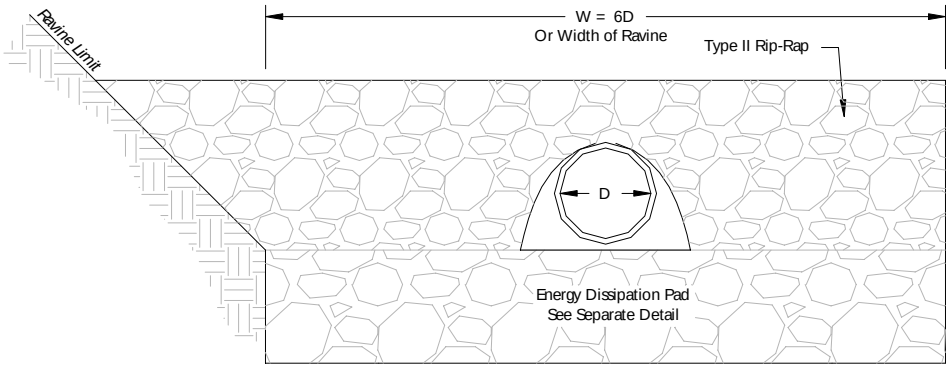

Elevation
NOt to scale

Concept Type A	Estimated Cost
Rip-Rap Pad	$2,000

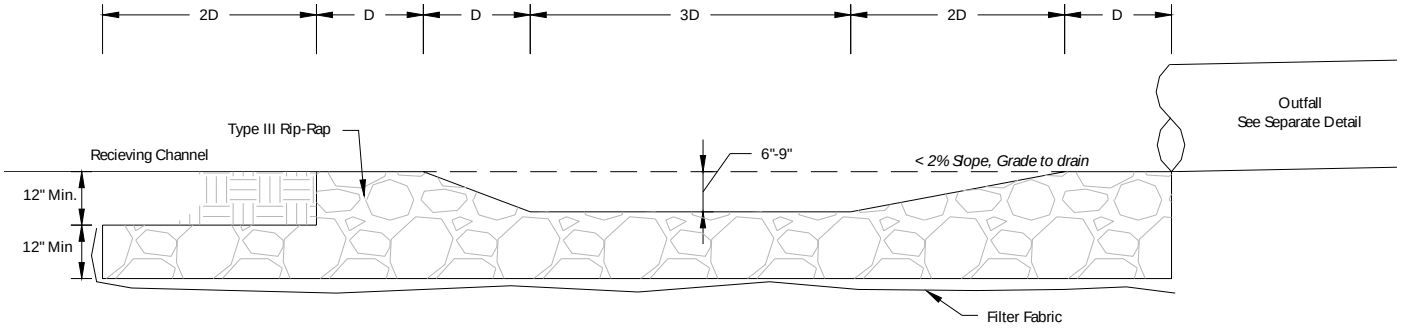

Cross Section
NOt to scale

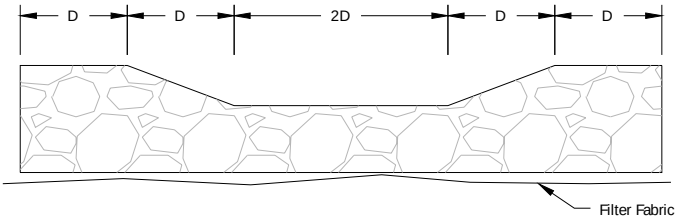

Elevation
NOt to scale

Concept Type B	Estimated Cost
Infiltration Pad	$3,000

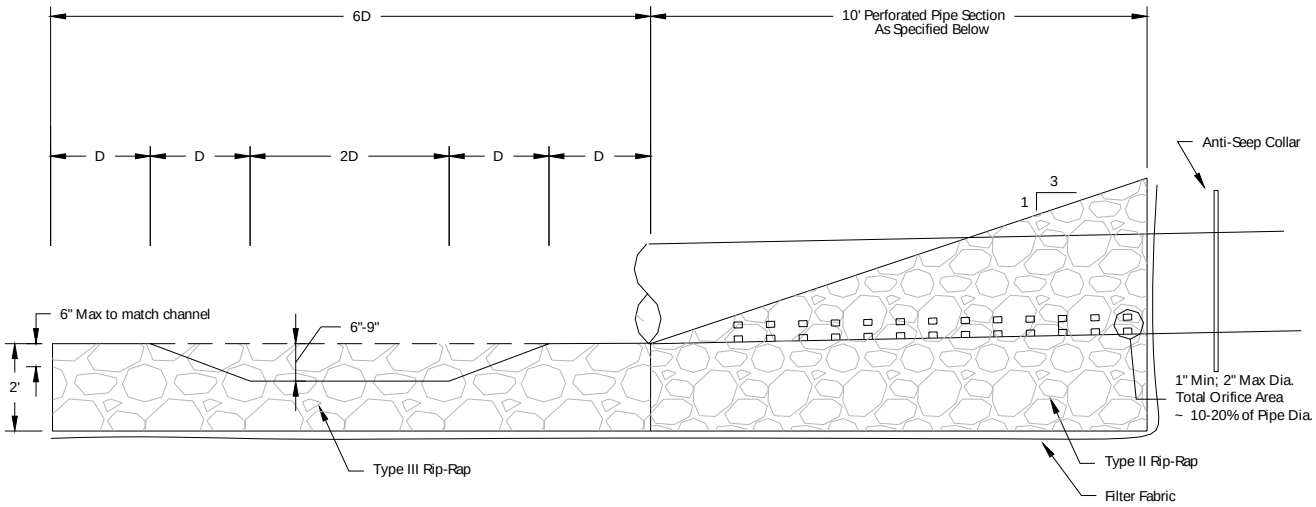

Cross Section
NOt to scale

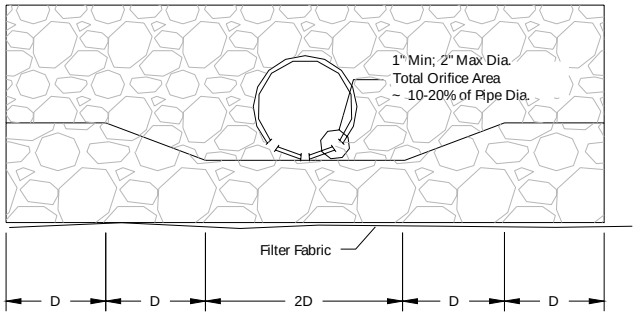

Elevation
NOt to scale

Concept Type C	Estimated Cost
Rip-Rap Check Dam	$2,000

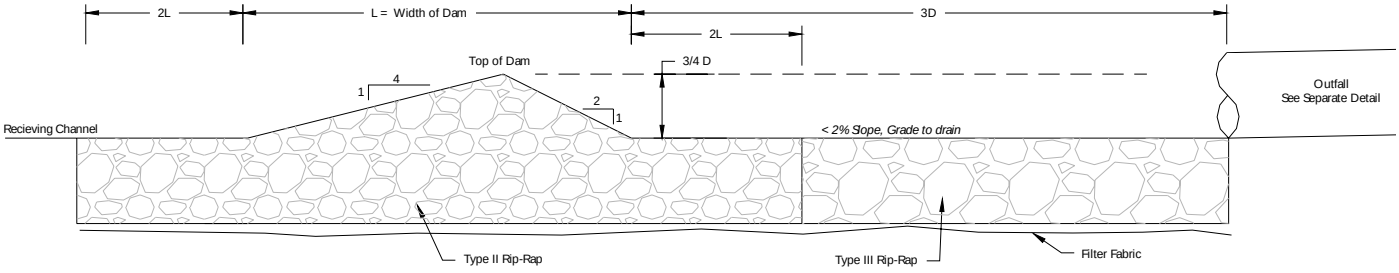

Cross Section
NOt to scale

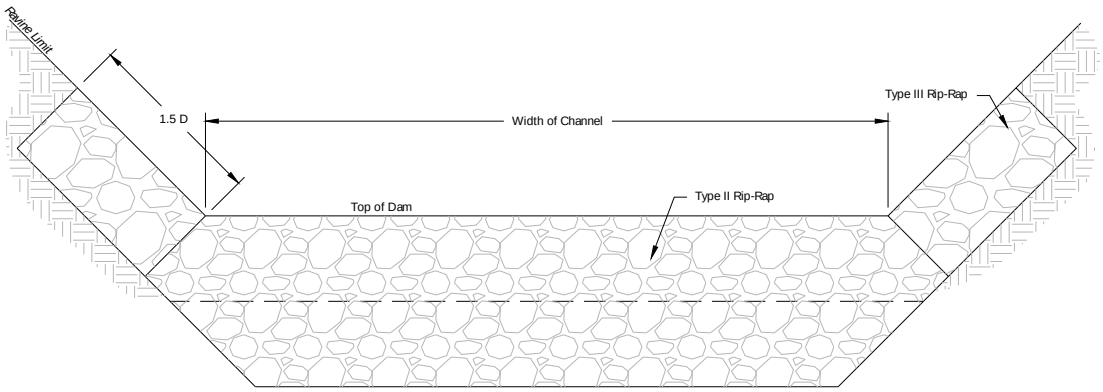

Elevation
NOt to scale

Standard Piping

Standard Piping involves the installation of "typical" stormwater conveyance piping in easily accessible and gently sloping sites. Pipe sizes are limited to 18 to 30" and installed in soil without need for buoyancy control or other special bedding treatment.

Special Piping

Special Piping is the installation of stormwater drainage infrastructure that requires special consideration due to either the complexity of the site or the materials required. Special piping can include oversized piping, ballast, manholes or other special features as determined during the design process. We have attempted to recognize the need for special considerations but have not specified the necessary approach.

Rip Rap

For the purposes of this report we have generally assumed rip rap to mean Type III installed to a depth of 2 feet. Through observations of sites in Colchester that have been armored with small (Type I or II) rip rap, it was clear that the energy of the water and the instability of soils demand a greater level of protection. Therefore, we are generally recommending that Type III rip rap, at a minimum be used when attempting to armor or stabilize a stream channel/outfall site. Obviously, smaller rip rap may be appropriate in some instances, however, this should be assessed on a case by case basis.

Soft Vegetation

Reestablishing vegetation is a powerful method of stabilizing soils. Grass and a variety of erosion control matting products are readily available to help to establish vegetation. However, special consideration must be made for sites where slopes are 3:1 or greater in sandy soils. These sites often showed a limited ability to establish vegetation and thus exhibited significant signs of erosion.

Hard Vegetation

The planting of trees can go a long way towards re-establishing the structural and ecological stability of a stream channel. However, special care must be used in the location of the planting and in the selection of the species. Hard vegetation should be used in those locations were the stream channel naturally meanders with in a broad streambed with step unstable banks. The trees will effectively stabilize and "contain" the stream with out limiting the ability of stream to meander as it wishes.

Priority Action List

And

Inspection Schedule

High and Moderate Priorities

Outfall	Name	Priority Ranking	Inspection Schedule	Cost
C3-025	118 ORCHARD	High	Every 5 Years	$9,100
C3-027	EAGLE PARK	High	Annual	$11,600
C4-003	MALLETS BAY	High	Annual	$12,400
D4-004	TROY AVENUE # 1	High	Annual	$8,200
D4-006	TROY AVENUE # 3	High	Annual	$3,600
D4-007	TROY AVENUE # 4	High	Annual	$11,000
B3-018	EAST LAKESHORE DR	Moderate	Every 5 Years	$19,000
C2-008	201 HOLLOW	Moderate	Annual	$12,400
C4-002	VALLEYFIELD	Moderate	Every 2 years	$9,900
D2-001	VILLAGE	Moderate	Every 5 Years	$8,000
D3-020	CANYON ESTATES DR	Moderate	Annual	$17,200
D4-005	TROY AVENUE # 2	Moderate	Every 2 years	$8,000

Total: Approximately

Low and Inspection Priorities

Outfall ID	Outfall Name	Priority Score	Inspection Schedule	Improvement Cost
B2-005	LAKESHORE	Low	Every 5 Years	---
B3-012	SHORE ACRES DR	Low	Every 5 Years	---
C3-018	ACORN LN	Low	Every 2 years	---
C3-029	ACORN LN #3	Low	Every 2 years	---
C4-001	MALLETS BAY	Low	Every 2 years	---
C4-005	YOUNG	Low	Every 2 years	---
D3-004	GIFFEN	Low	Every 2 years	---
D3-009	LIBERTY	Low	Every 5 Years	---
D3-011	PARKWOOD	Low	Every 5 Years	---
D4-008	ROUTE 15	Low	Annual	---
D4-010	TROY AVENUE #6	Low	Every 5 Years	---
A2-001	HOLY CROSS	Inspection	Every 5 Years	---
A3-001	BUCKINGHAM	Inspection	Every 5 Years	---
A3-002	BUCKINGHAM DR	Inspection	Every 5 Years	---
A3-003	WINDMERE WAY	Inspection	Every 5 Years	---
A3-004	RIVER RD	Inspection	Every 5 Years	---
A3-005	END OF MALLARD	Inspection	Every 2 years	---
B2-001	OVERLAKE	Inspection	Every 5 Years	---
B2-002	TIMBERLAKE	Inspection	Every 5 Years	---
B2-003	MARBLE ISLAND RD	Inspection	Every 5 Years	---
B2-004	COATES ISLAND	Inspection	Every 5 Years	---
B3-001	MALLARD	Inspection	Every 5 Years	---
B3-002	MALLARD	Inspection	Every 5 Years	---
B3-003	PORTERS POINT	Inspection	Every 5 Years	---
B3-004	HEINEBURG	Inspection	Every 5 Years	---
B3-005	PORTER PT	Inspection	Every 5 Years	---
B3-006	HOLBROOK	Inspection	Every 5 Years	---
B3-007	MOBIL-HEINEBURG	Inspection	Every 5 Years	---
B3-008	PARSONS RD	Inspection	Every 5 Years	---
B3-009	MCRAE	Inspection	Every 5 Years	---
B3-010	MACRE RD	Inspection	Every 5 Years	---
B3-011	SHORE ACRES RD	Inspection	Every 5 Years	---
B3-013	SHORE ACRES RD	Inspection	Every 5 Years	---
B3-014	SHORE ACRES RD	Inspection	Every 5 Years	---
B3-015	SHORE ACRES RD	Inspection	Every 5 Years	---
B3-016	LAKESHORE DR	Inspection	Every 5 Years	---
B3-017	LAKEVIEW DR	Inspection	Every 5 Years	---
B3-019	BELLWOOD SUB. SYS.	Inspection	Every 5 Years	---
C1-001	WATKINS RD	Inspection	Every 5 Years	---
C1-002	CHIMNEY HILL RD	Inspection	Every 5 Years	---
C2-001	1086BAY	Inspection	Every 5 Years	---
C2-002	1062 BAY	Inspection	Every 5 Years	---
C2-003	35 BAY	Inspection	Every 5 Years	---
C2-004	1277 BAY	Inspection	Every 5 Years	---
C2-005	BAY	Inspection	Every 5 Years	---
C2-006	GRANITE CREEK	Inspection	Every 5 Years	---
C2-007	GRANITE CREEK	Inspection	Every 5 Years	---
C2-009	CHESTNUT	Inspection	Every 2 years	---
C2-010	SHETLAND	Inspection	Every 5 Years	---
C2-011	INDIAN CIRCLE	Inspection	Every 2 years	---
C3-001	LAVGNE RD	Inspection	Every 5 Years	---
C3-002	TOWERRIDGE	Inspection	Every 5 Years	---
C3-003	EVERBREEZE	Inspection	Every 5 Years	---
C3-004	BLAKLEY	Inspection	Every 5 Years	---
C3-005	796 BAY	Inspection	Every 5 Years	---
C3-006	903 BAY	Inspection	Every 5 Years	---
C3-007	JOEY DR	Inspection	Every 5 Years	---
C3-008	JOEY DR	Inspection	Every 5 Years	---
C3-009	BAYVIEW DR	Inspection	Every 5 Years	---
C3-010	JASON	Inspection	Every 5 Years	---
C3-011	JASON	Inspection	Every 5 Years	---
C3-012	JASON	Inspection	Every 5 Years	---
C3-013	EDGEWOOD	Inspection	Every 5 Years	---
C3-014	EDGEWOOD DR	Inspection	Every 5 Years	---
C3-015	EDGEWOOD DR	Inspection	Every 5 Years	---
C3-016	EDGEWOOD DR	Inspection	Every 5 Years	---
C3-017	EDGEWOOD DR	Inspection	Every 5 Years	---
C3-019	ACORN LN	Inspection	Every 2 years	---
C3-020	SUNDERLAND WOODS	Inspection	Every 5 Years	---
C3-021	CHAMPLAIN DR	Inspection	Every 5 Years	---
C3-022	ROUTE 2 + 7	Inspection	Every 5 Years	---
C3-023	OAK CIRCLE RD	Inspection	Every 2 years	---
C3-024	COUNTRY MEADOWS	Inspection	Every 5 Years	---
C3-026	EAGLE PARK	Inspection	Every 2 years	---
C3-028	SUNDERLAND WDS #2	Inspection	Every 5 Years	---
C3-030	MIDDLE SCHOOL	Inspection	Every 5 Years	---
C3-031	TOWN OFFICES	Inspection	Every 2 years	---
C3-032	HEALTH CENTER	Inspection	Every 5 Years	---
C4-004	MALLETS BAY	Inspection	Every 2 years	---
C4-006	COLONIAL	Inspection	Every 2 years	---
C4-007	WATER TOWER HILL	Inspection	Every 5 Years	---
C4-008	WATER TOWER HILL	Inspection	Every 5 Years	---
C4-009	WATER TOWER HILL	Inspection	Every 5 Years	---
C4-010	WATER TOWER HILL	Inspection	Every 5 Years	---
C4-011	SHAWS	Inspection	Every 5 Years	---
C4-012	SHAWS	Inspection	Every 5 Years	---
C4-013	SHAWS	Inspection	Every 5 Years	---
C4-014	ROUTES 2 + 7	Inspection	Every 5 Years	---
C4-015	ROUTES 2 + 7	Inspection	Every 5 Years	---
C4-016	LOWER MTN VIEW	Inspection	Every 5 Years	---
C4-017	HERCULES	Inspection	Every 5 Years	---
C4-018	ST.MICHAEL'S COLLEGE	Inspection	Every 2 years	---
C4-019	ORION DRIVE	Inspection	Every 5 Years	---
C4-020	REYNOLDS	Inspection	Every 5 Years	---
D3-001	FORMAN	Inspection	Every 2 years	---
D3-002	FORMAN	Inspection	Every 2 years	---
D3-003	WELLS AVE	Inspection	Every 5 Years	---
D3-005	KYLIE'S	Inspection	Every 5 Years	---
D3-006	HIDDEN OAKS	Inspection	Every 5 Years	---
D3-007	WALL	Inspection	Every 5 Years	---
D3-008	KYLIE'S	Inspection	Every 5 Years	---
D3-010	MAIN ST	Inspection	Every 5 Years	---
D3-012	WOLCOTT	Inspection	Every 5 Years	---
D3-013	WOODROSE	Inspection	Every 5 Years	---
D3-014	VILLAGE COMMONS	Inspection	Every 5 Years	---
D3-015	WESWARD	Inspection	Every 2 years	---
D3-016	JOCELYN	Inspection	Every 5 Years	---
D3-017	ARBOR	Inspection	Every 5 Years	---
D3-018	ARBOR	Inspection	Every 5 Years	---
D3-019	ARBOR	Inspection	Every 5 Years	---
D3-021	HILLTOP CT	Inspection	Every 2 years	---
D3-022	ARBOR	Inspection	Every 5 Years	---
D3-023	BIRCHWOOD	Inspection	Every 5 Years	---
D4-001	FORT ETHAN ALLEN	Inspection	Every 2 years	---
D4-002	FORT ETHAN ALLEN	Inspection	Every 5 Years	---
D4-003	FORT ETHAN ALLEN	Inspection	Every 2 years	---
D4-009	TROY AVENUE #5	Inspection	Every 5 Years	---

Annual and Biannual Inspections Schedule

Outfall	Name	Priority Ranking	Inspection Schedule
C2-008	201 HOLLOW	Moderate	Annual
C3-027	EAGLE PARK	High	Annual
C4-003	MALLETS BAY	High	Annual
D3-020	CANYON ESTATES DR	Moderate	Annual
D4-004	TROY AVENUE # 1	High	Annual
D4-006	TROY AVENUE # 3	High	Annual
D4-007	TROY AVENUE # 4	High	Annual
D4-008	ROUTE 15	Low	Annual
A3-005	END OF MALLARD	Inspection	Every 2 years
C2-009	CHESTNUT	Inspection	Every 2 years
C2-011	INDIAN CIRCLE	Inspection	Every 2 years
C3-018	ACORN LN	Low	Every 2 years
C3-019	ACORN LN	Inspection	Every 2 years
C3-023	OAK CIRCLE RD	Inspection	Every 2 years
C3-026	EAGLE PARK	Inspection	Every 2 years
C3-029	ACORN LN # 3	Low	Every 2 years
C3-031	TOWN OFFICES	Inspection	Every 2 years
C4-001	MALLETS BAY	Low	Every 2 years
C4-002	VALLEYFIELD	Moderate	Every 2 years
C4-004	MALLETS BAY	Inspection	Every 2 years
C4-005	YOUNG	Low	Every 2 years
C4-006	COLONIAL	Inspection	Every 2 years
C4-018	ST.MICHAEL'S COLLEGE	Inspection	Every 2 years
D3-001	FORMAN	Inspection	Every 2 years
D3-002	FORMAN	Inspection	Every 2 years
D3-004	GIFFEN	Low	Every 2 years
D3-015	WESWARD	Inspection	Every 2 years
D3-021	HILLTOP CT	Inspection	Every 2 years
D4-001	FORT ETHAN ALLEN	Inspection	Every 2 years
D4-003	FORT ETHAN ALLEN	Inspection	Every 2 years
D4-005	TROY AVENUE # 2	Moderate	Every 2 years

5 Year Inspection Schedule

A2-001	HOLY CROSS	Inspection	Every 5 Years
A3-001	BUCKINGHAM	Inspection	Every 5 Years
A3-002	BUCKINGHAM DR	Inspection	Every 5 Years
A3-003	WINDMERE WAY	Inspection	Every 5 Years
A3-004	RIVER RD	Inspection	Every 5 Years
B2-001	OVERLAKE	Inspection	Every 5 Years
B2-002	TIMBERLAKE	Inspection	Every 5 Years
B2-003	MARBLE ISLAND RD	Inspection	Every 5 Years
B2-004	COATES ISLAND	Inspection	Every 5 Years
B2-005	LAKESHORE	Low	Every 5 Years
B3-001	MALLARD	Inspection	Every 5 Years
B3-002	MALLARD	Inspection	Every 5 Years
B3-003	PORTERS POINT	Inspection	Every 5 Years
B3-004	HEINEBURG	Inspection	Every 5 Years
B3-005	PORTER PT	Inspection	Every 5 Years
B3-006	HOLBROOK	Inspection	Every 5 Years
B3-007	MOBIL-HEINEBURG	Inspection	Every 5 Years
B3-008	PARSONS RD	Inspection	Every 5 Years
B3-009	MCRAE	Inspection	Every 5 Years
B3-010	MACRE RD	Inspection	Every 5 Years
B3-011	SHORE ACRES RD	Inspection	Every 5 Years
B3-012	SHORE ACRES DR	Low	Every 5 Years
B3-013	SHORE ACRES RD	Inspection	Every 5 Years
B3-014	SHORE ACRES RD	Inspection	Every 5 Years
B3-015	SHORE ACRES RD	Inspection	Every 5 Years
B3-016	LAKESHORE DR	Inspection	Every 5 Years
B3-017	LAKEVIEW DR	Inspection	Every 5 Years
B3-018	EAST LAKESHORE DR	Moderate	Every 5 Years
B3-019	BELLWOOD SUB. SYS.	Inspection	Every 5 Years
C1-001	WATKINS RD	Inspection	Every 5 Years
C1-002	CHIMNEY HILL RD	Inspection	Every 5 Years
C2-001	1086BAY	Inspection	Every 5 Years
C2-002	1062 BAY	Inspection	Every 5 Years
C2-003	35 BAY	Inspection	Every 5 Years
C2-004	1277 BAY	Inspection	Every 5 Years
C2-005	BAY	Inspection	Every 5 Years
C2-006	GRANITE CREEK	Inspection	Every 5 Years
C2-007	GRANITE CREEK	Inspection	Every 5 Years
C2-010	SHETLAND	Inspection	Every 5 Years
C3-001	LAVGNE RD	Inspection	Every 5 Years
C3-002	TOWERRIDGE	Inspection	Every 5 Years
C3-003	EVERBREEZE	Inspection	Every 5 Years
C3-004	BLAKLEY	Inspection	Every 5 Years
C3-005	796 BAY	Inspection	Every 5 Years
C3-006	903 BAY	Inspection	Every 5 Years
C3-007	JOEY DR	Inspection	Every 5 Years
C3-008	JOEY DR	Inspection	Every 5 Years
C3-009	BAYVIEW DR	Inspection	Every 5 Years
C3-010	JASON	Inspection	Every 5 Years
C3-011	JASON	Inspection	Every 5 Years
C3-012	JASON	Inspection	Every 5 Years
C3-013	EDGEWOOD	Inspection	Every 5 Years
C3-014	EDGEWOOD DR	Inspection	Every 5 Years
C3-015	EDGEWOOD DR	Inspection	Every 5 Years
C3-016	EDGEWOOD DR	Inspection	Every 5 Years
C3-017	EDGEWOOD DR	Inspection	Every 5 Years
C3-020	SUNDERLAND WOODS	Inspection	Every 5 Years
C3-021	CHAMPLAIN DR	Inspection	Every 5 Years
C3-022	ROUTE 2 + 7	Inspection	Every 5 Years
C3-024	COUNTRY MEADOWS	Inspection	Every 5 Years
C3-025	118 ORCHARD	High	Every 5 Years
C3-028	SUNDERLAND WDS #2	Inspection	Every 5 Years
C3-030	MIDDLE SCHOOL	Inspection	Every 5 Years
C3-032	HEALTH CENTER	Inspection	Every 5 Years
C4-007	WATER TOWER HILL	Inspection	Every 5 Years
C4-008	WATER TOWER HILL	Inspection	Every 5 Years
C4-009	WATER TOWER HILL	Inspection	Every 5 Years
C4-010	WATER TOWER HILL	Inspection	Every 5 Years
C4-011	SHAWS	Inspection	Every 5 Years
C4-012	SHAWS	Inspection	Every 5 Years
C4-013	SHAWS	Inspection	Every 5 Years
C4-014	ROUTES 2 + 7	Inspection	Every 5 Years
C4-015	ROUTES 2 + 7	Inspection	Every 5 Years
C4-016	LOWER MTN VIEW	Inspection	Every 5 Years
C4-017	HERCULES	Inspection	Every 5 Years
C4-019	ORION DRIVE	Inspection	Every 5 Years
C4-020	REYNOLDS	Inspection	Every 5 Years
D2-001	VILLAGE	Moderate	Every 5 Years
D3-003	WELLS AVE	Inspection	Every 5 Years
D3-005	KYLIE'S	Inspection	Every 5 Years
D3-006	HIDDEN OAKS	Inspection	Every 5 Years
D3-007	WALL	Inspection	Every 5 Years
D3-008	KYLIE'S	Inspection	Every 5 Years
D3-009	LIBERTY	Low	Every 5 Years